ISSN: 2321-8169
163 - 166

Finite Element Analysis of a Backhoe loader to study Fatigue Failure

Roshan V. Marode[1]
Assistant Professor
MGI-COET, Shegaon
Maharshtra, India
roshan.marode@gmail.com

Anand G. Bhatkar[2]
Assistant Professor
MGI-COET, Shegaon
Maharshtra, India
anandbhatkar@gmail.com

***Abstract*—**Inmechanical components fatigue failure is common cause. Fatigue crack are initially starts at stress concentration. & it is mostly found in the design of engineering components. In this paper work on the static structural analysis and cyclic load analysis had been performed on a backhoe loader with the help of finite element method.
Fatigue values are used to find S-N curves which withdraws data regarding possible cycles at which crack initiates. Primary aim of the study is to compare the failure conditions of the component for static loading and reversed cyclic loading.

Keywords-*FEA; loader; backhoe; fatigue; ANSYS*

*****

I. INTRODUCTION

Backhoe-Loader is best preferred for excavation & earth moving owing its versatility. Many construction firms consider the backhoe to be the key part of earthmovers. The backhoe is used for excavation of hard & tough material, handle consistent soil and parts of rocks made by blasting. It is also to the back of the tractor& easily lifts weighty loads. The backhoe grows its name from the placement of the scooper bucket assembly on the back of the tractor. The backhoe involves of three pieces – the boom, the stick or dipper, and the bucket. The boom is the superior arm piece. The stick is the inferior arm piece. The bucket is the digging and lifting tool at the end.Backhoe Loaders are used chiefly to excavate below the normal surface of the ground on which the parts of machine rests &load it into trucks or tractor drawn wagons or onto conveyor belts. They are accomplished of excavating all classes of earth, except solid rock, without prior loosing. They are improved to excavating channels, pits for the basement, &general grading work, which require precious control of pits. Chassis of commercial vehicles have nearly same appearance since the model was established. It specifies that there is very gentle and stable improvement in the chassis.In the period of globalization & tough competition the use of machines is growing for the earth moving works, considerable attention has been focused on designing the earthmoving tools. Thus it is very much essential for the designers to provide not only an equipment of supremedependability but also of minimum weight & cost, keeping design safe under loading conditions by cautious stress analysis of this machines.

II. PROBLEM FORMULATION

In the present study a backhoe loader bucket is considered for analysis. The objective of this work is to analyze the static loading capacity and to determine the fatigue life of the backhoe loader. The analysis is performed using ANSYS software and modelling of the bucket is performed using Solidworks. Following table lists the properties of the structural steel which is used as the material.

The analysis includes the static structural analysis for the calculation of the stresses and these stresses are compared with the stresses for fatigue life.

Table 1 Material Properties

Density	7850 kg/m^3
Young's Modulus	2×10^5 MPa
Poisson's Ratio	0.3
Bulk Modulus	1.667×10^{11} Pa
Tensile Yield Strength	250 MPa
Compressive Yield Strength	250 MPa
Tensile Ultimate Strength	460 MPa

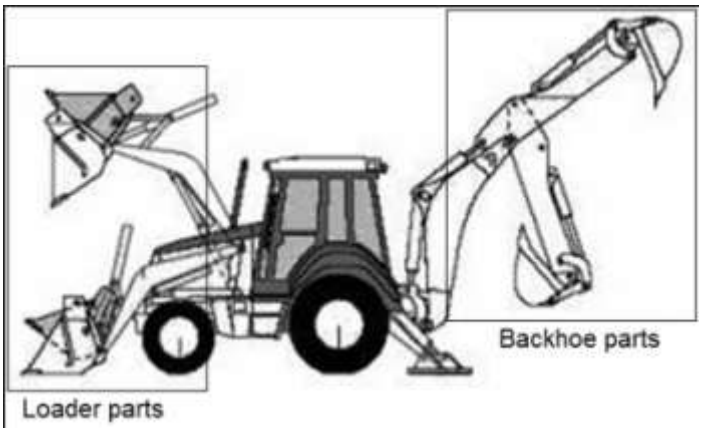

Figure 1 Standard backhoe loader

ISSN: 2321-8169
163 - 166

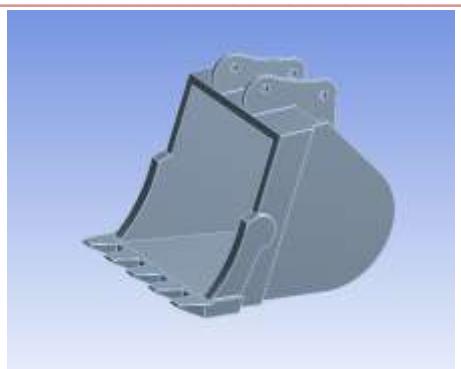

Figure 2 Model of the backhoe

III. METHOD OF ANALYSIS

As boundary conditions the part is loaded with a force of 3000 N and the fixed supports are provided as shown in figure 2. After application of force of 3000 N body is set to have volumetric meshing. Meshing is a collection of vertices, edges and faces, which defines the shape of tetrahedral mesh.

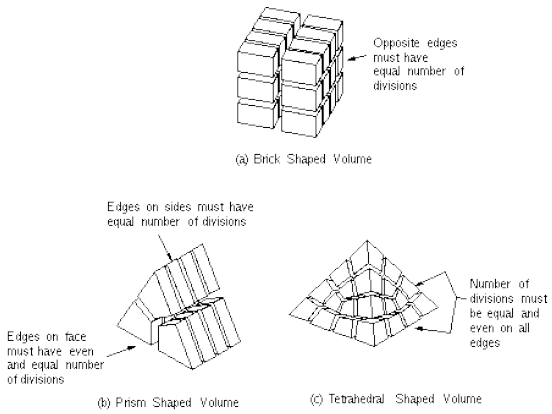

In tetrahedral meshing , aspect ratio, smothness, fine and coarse item played important role for precise reults.the ratio of the width to the height of an element or item is termed as aspect ratio, Figure 4 shows the meshing used for the part. It contains 131083 Nodes and 76076 Elements. The mesh is of type tetrahedral three dimensional unstructured with medium smoothness and aspect ratio.

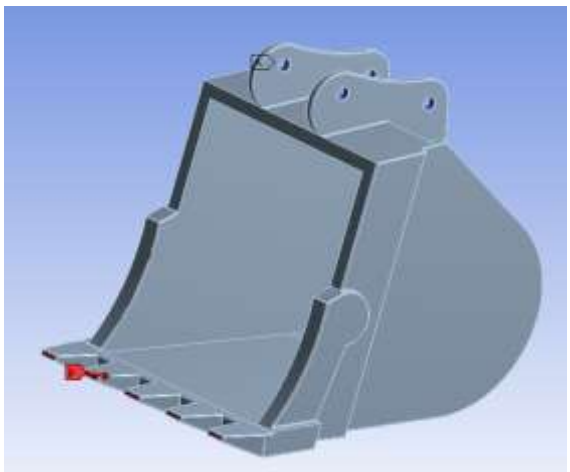

Figure 3 Boundary conditions

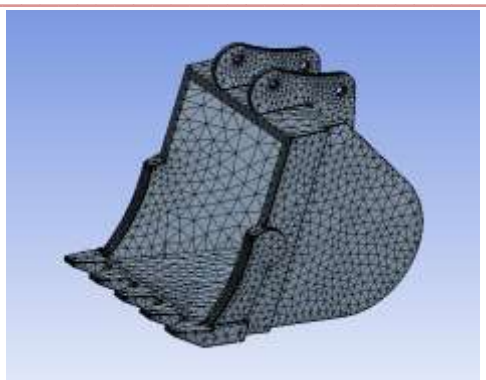

Figure 4 Meshing

IV. RESULTS

The analysis that was conducted yielded results for equivalent stresses and shows the fatigue life of the backhoe for the cyclic loading. The loading in both the cases is symmetrical and the cyclic loading is fully reversed. The results for the life are generated using Goodman criteria for fatigue failure.

The S-N curve Figure 7 shows the values of the alternating stress the material can carry before it fails against number of cycles.

The sensitivity graph is plotted from the load capacity of 0.5 to 1 and the response of the cyclic loading is shown.

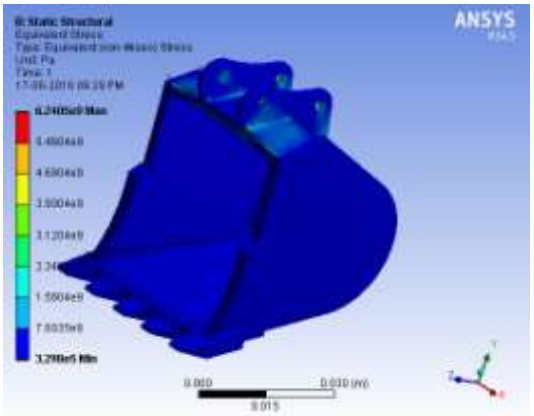

Figure 5 Equivalent stress

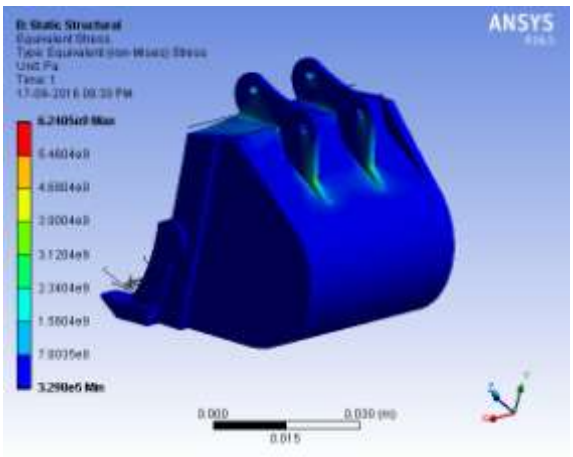

Figure 6 Region of Max. Stress

ISSN: 2321-8169
163 - 166

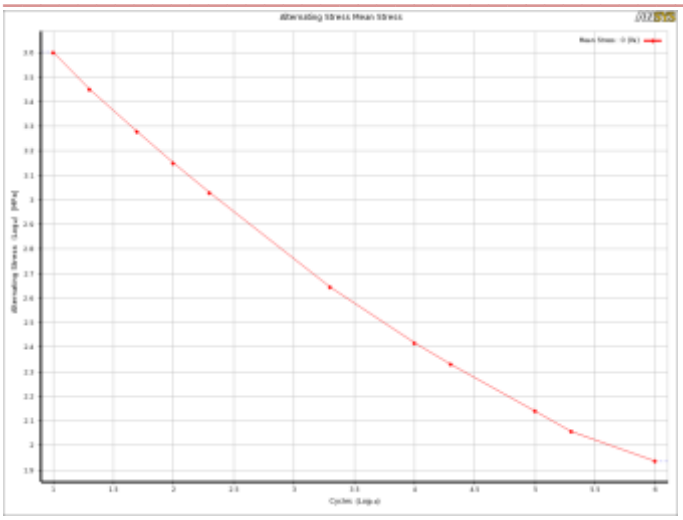

Figure 7 S-N curve for the material

Table 2 Cyclic loading table

1	Cycles	Alternating Stress (MPa)
2	10	3999
3	20	2827
4	50	1896
5	100	1413
6	200	1069
7	2000	441
8	10000	262
9	20000	214
10	1E+05	138
11	2E+05	114
12	1E+06	86.2
*		

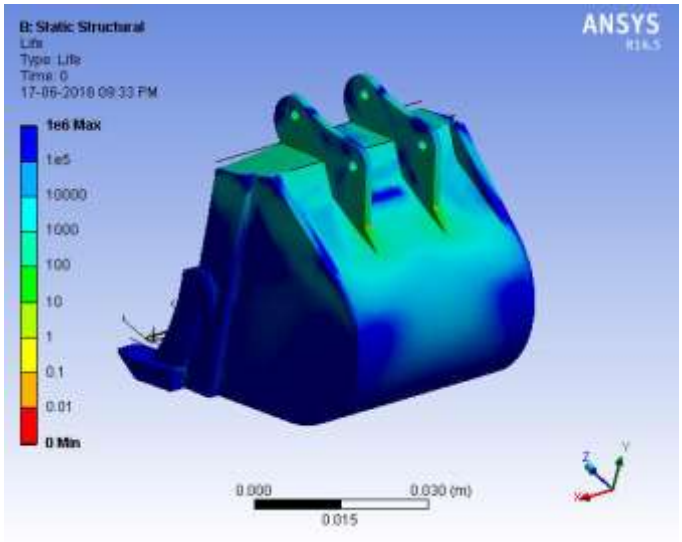

Figure 8 Fatigue loading

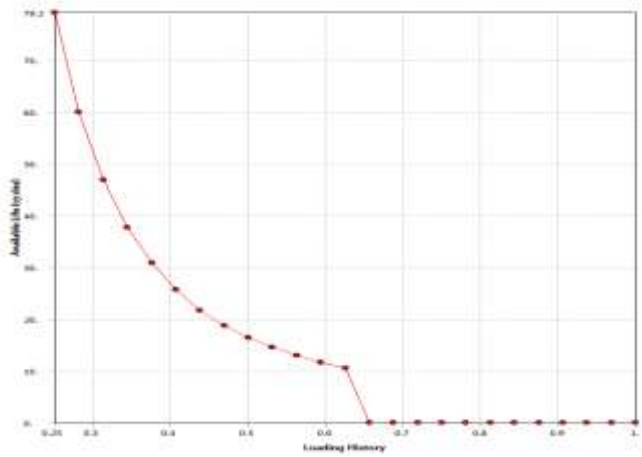

Figure 9 Sensitvity graph

V. CONCLUSION

The backhoe-loader bucket have been analyzed with the maximum loads and boundary conditions using FEM. FEA program ANSYS workbench has been used in the analysis. Analyses have been carried out for the maximum hydraulic cylinder forces. Symmetrical boundary conditions have been examined along with the fatigue life. The theoretical life cycle of any component in ANSYS is considered as 10^6 and in the present study the estimated life cycle is 0 for very small region. This can further be improved by changing the shape of the feature. It is also observed that the life of the component reduces considerably as it undergoes fatigue loading.

REFERENCES

[1] Bhargav J Gadhvi, B. P. Patel and P. M. Patel, "Development of a Controller for Mini Hydraulic Excavator as a Review", Proceeding of National Conference on Recent Advances in Manufacturing, SVNIT, Surat, 19th -21st July, 2010, pp. 198-203.

[2] S. S. Rao, P.K. Bhatti, "Probabilistic approach to manipulator kinematics and dynamics", Reliability Engineering and System Safety,Elsevier Science, 2001, pp. 47 - 58.

[3] Donald Margolis, Taehyun Shim "Instability Due to Interacting Hydraulic and Mechanical Dynamics in Backhoes", Journal of Dynamic Systems, Measurement and Control, ASME, Vol. 125, 2003, pp. 497-504.

[4] Ahmet Erklig, Eyüp Yeter, "The Improvements of the Backhoe-Loader Arms", Modeling and Numerical Simulation of Material Science, 2013, 3, 142-148.

[5] Vishal Francis, Rajnish Kumar Rai, Anup Kumar Singh, Pratyush Kumar Singh, Himanshu Yadav " Structural Analysis of Ladder Chassis Frame for Jeep Using Ansys " International Journal of Modern Engineering Research (IJMER) ISSN: 2249–6645, Vol. 4, Issue 4, 2014.

[6] C.F. Hofstra, ,A. J. M. van Hemme n, ,S. A. Miedema, J. van Hulsteyn, "Describing the position of backhoe dredge buckets", 1999.

[7] Mehta Gaurav K, "Design and Development of an Excavator Attachment" M. tech Dissertation Thesis, Nirma University, Institute of Technology, Ahmedabad, May 2008, pp. 1.

[8] MohdAzizi Muhammad Nora, HelmiRashida, Wan MohdFaizul Wan Mahyuddin "Stress Analysis of a Low Loader Chassis" Elsevier Ltd. Sic Verse Science Direct Procedia Engineering, July 2012

[9] CicekKaraoglu, N. SefaKuralay "Stress analysis of a truck chassis with riveted joints "Elsevier Science B.V Finite Elements in Analysis and Design 38 (2002) 1115–1130.

[10] David A Bradley, Derek W Seward, "Developing Real-Time Autonomous Excavation –The Lucie", Proceedings of the 34thConference on Decision & Control, IEEE, New Orleans, LA -December 1995, pp. 3028 –3033.

[11] V. Vamsi Krishnam Raj u, B. Durga Prasad, M. Balaramakrishna, Y. Srinivas" Modeling and Structural Analysis of Ladder Type Heavy Vehicle Frame" International Journal of Modern Engineering Research (IJMER), ISSN: 2249–6645, Vol. 4, Issue 5, May 2014.

[12] Abhishek Singh, Vishal Soni, Aditya Singh " Structural Analysis of Ladder Chassis for Higher Strength" International Journal of Emerging Technology and Advanced Engineering, ISSN 2250 - 2459, Volume 4, Issue 2, February 2014

[13] Hemant B.Patil, SharadD.Kachave , Eknath R.Deore" Stress Analysis of Automotive Chassis with Various Thicknesses" IOSR Journal of Mechanical and Civil Engineering (IOSR-JMCE) , ISSN: 2278-1684, Volume 6, Issue 1, Mar –Apr 2013, PP 44-49

[14] Vimalkumar A Patel " Static structural analysis of Backhoe loader chassis " International Journal Of Advance Science, Engineering and Technology(IJASET),ISSN 2319-5924, Val 1, Issue 1, 2012, pp. 17-20

[15] Fuad Mrad, M. Asem Abdul-Malak, Salah Sadek, and Ziad Khudr, "Automated excavation in construction using robotics trajectory and envelop generation", Engineering, Construction and Architectural Management, Blackwell Science Ltd., 2002, pp. 325-335.

[16] Mehmet Yener, "Design of a Computer Interface for Automatic Finite Element Analysis of an Excavator Boom", M.S. Thesis,The Graduate School of natural and Applied Sciences of Middle East Technical University, May 2005, pp. 1 - 4, 68 - 69.

[17] S. S. Rao, P.K. Bhatti, "Probabilistic approach to manipulator kinematics and dynamics", Reliability Engineering and System Safety,Elsevier Science, 2001, pp. 47-58.

[18] Bloom F, Coffin D. Handbook of thin plate buckling and post buckling. Chapman & Hall; 2001.

[19] Bhaveshkumar P. Patel, Dr. J. M. Prajapati, "Soil - Tool Interaction as a Review for Digging Operation of Mini Hydraulic Excavator", International Journal of Engineering Science and Technology, Vol. 3 No. 2, February 2011, 894-901.

[20] Hsin-Sheng Lee, Shinn-Liang Chang and Kuo-Huang Lin, "A study of the design, manufacture and remote control of a pneumatic excavator", International Journal of Mechanical Engineering Education, 2002, pp. 345-361.

[21] N.K.Ingole, D.V.Bhope " Stress analysis of tractor trailer chassis for self-weight reduction " International Journal of Engineering Science and Technology (IJEST), ISSN: 0975 -5462 Vol. 3 No, 9 September 2011.

[22] Monika s. agrawal, md razik "finite element analysis of truck chassis" international journal of engineering sciences & research Technology (ijesrt), ISSN: 2277-9655,

[23] P. K. Vaha, M. J. Skibniewski, "Dynamic Model of Excavator", Journal of Aerospace Engineering, Vol. 6, No. 2, April, 1993.R. Nicole, "Title of paper with only first word capitalized," J. Name Stand. Abbrev., in press.