ISSN: 2321-8169
423 - 426

Automation of Railway Gate Control at Level Crossing using Raspberry Pi

Vinit P. Kharkar
Assistant Professor, ExTC Dept.
PRMCEAM, Badnera
Badnera-Amravati, India
E-mail: vinitkharkar27@gmail.com

Abstract **–** The work presented in this paper attempts to automate the opening and closing of gates at a railway level crossing. Normally, level crossing railway gates are operated by a gatekeeper manually based on the information received from railway station. In situations where the train is late, the gates remain closed for durations casing dense traffic jams near the gates. This human intervention can be avoided by automating the process which also minimizes the risk factor of accident at level crossing due to lack of human attention. The proposed system uses infra red sensors to detect the arrival and departure of train at the railway level crossing and the Raspberry Pi module is incorporated to control the opening and closing of the gate with the help of servo motor. When the arrival of train is sensed by first sensor, signal turns red and the motor operates to close the gates. The gates remain closed until the train us completely moves away from the railway gate. When this situation of departure of train is detected by the second sensor, the traffic light turns green and motor operates to open the gates. Thus, the automation of the railway gate is achieved using sensors and raspberry pi.

Keywords- Raspberry Pi, Infra red sensor, level crossing,

*****

I. INTRODUCTION

The railway system is most widely used mode of public transportation in India which makes the railway safety a crucial aspect for its operation. It is a one of those modes of transport that has to face lots of challenges due to human errors such as level cross accidents. A level cross is an intersection of a road and a railway line which requires a continuous human coordination and monitoring, the lack of which may results in accidents at this junction. The traffic at the level crosses is controlled by manually operated gates which are normally done by gatekeeper. In order to avoid the error caused by human interventions, the proposed work in the paper introduces a concept of automatic opening and closing of railway gates at the level crossings.

Level crossings are monitored and managed by the gatekeeper and the usually gatekeeper is instructed by means of telephone from the control room. But the chances of manual error that could occur at this level are high since it requires the detailed and actual knowledge of train time table and train running status. The delay in opening and closing of gate could lead to severe railway accidents. The accident at the railway crossing is one of the major challenges faced by the Indian railways for which the lots of ideas and efforts have been employed to overcome this major issue.

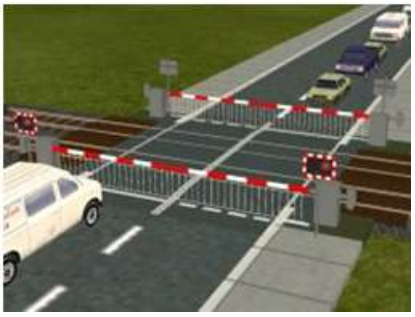

Fig: Level Crossing

The work presented in this paper attempts to develop a system which automates the gate operations i.e. opening and closing at the railway crossing using Raspberry Pi. The existing system involves the manual operation by the gate keepers which mainly depends upon the information received from control room. The human errors such as delay in informing the gatekeeper about arrival of the arrival of the train, delay in gate operation by gate keeper, obstacles stuck in the level cross etc. leads to increasing rate of accidents at the level cross. Thus the railway automation system aims to deal mainly with reduction in total time taken for gate operation at the level cross and ensuring the safety of passengers at the level cross when the train passes. The reduction in direct human intervention such as communication from control room, during railway gate operation in turn helps to reduce the human errors. Due to which there is possibility of information loss in the commutation between gatekeeper and the control room is reduced. Since the gate operation is based on Infrared (IR)

Sensor, the time for operation of railway gates is reduces which also includes the time for which the gates will remain closed. This ensures that the routine traffic must be held for least amount of time at the railway crossing. The paper intends to develop an automatic railway gate control system which is reliable and secured than the existing manual systems.

The paper is organized as follows. Chapter II gives information about the related work which is previously carried out. Chapter III deals with the system overview and its requirements. Chapter IV describes the system architecture, block diagram, circuit diagram and the hardware requirements. Chapter no. V discuses about the result of experiments carried on the basis of proposed system as stated earlier in chapter no. IV. Finally, the conclusion and future scope about the system described in the paper is mentioned in chapter VI.

II. RELATED WORK

Karthik Krishnamurthi Monica Bobby, Vidya V., Edwin Baby [1] presented system based on the arduino and IR sensor for automatic control of railway gates. The paper presented by Ahmed Salih Mahdi. Al-Zuhairi [2] describes a system based on microcontroller for controlling railway gate and crossing. They found that the time for operation of railway gates is less as compared to manually operated gates and also reduces the human labor. Hnin Ngwe Yee Pwint, Zaw Myo Tun, Hla Myo Tun [3] presented a paper on automatic railway gate control using microcontroller in which the PIC16F877A is used. The system uses DC motor to open and close the gates automatically in clockwise or anticlockwise direction. The LCD display shows the status of railway gate control system along with buzzer and light indicator when the train is passing through. This whole system is controlled by microcontroller PIC16F877A. The authors, B. Brailson Mansingh, K. S. Selvakumar, and S. R. Vignesh Kumar [4] presented a paper on 'automation in unmanned railway crossing' which uses simple mechanical and electrical components to control railway gates with the help of IR sensor, LED display and Pinion of rack and pinion arrangement. The system proposed by Acy M. Kottalil, Abhijith S, Ajmal M M, Abhilash L. J., Ajith Babu [5] in their paper is based on microcontroller ATmega 16A along with the use of IR sensor. From the results they conclude that their project is necessary tool for current railway system and can be implemented to reduce the number of accidents and unnecessary waiting time at railway crossing. The objective of the paper presented by Krishna, Shashi Yadav and Nidhi [6] is to control the railway tracks by using anti collision technique. They designed a model for railway track controller by using 8952 microcontroller to avoid accidents.

III. SYSTEM OVERVIEW

In India the maximum speed at which a train moves is around 90 km/hr and the minimum speed of a passenger/goods train is about 60 km/hr. so, considering this scenario, the ideal distance at which the sensors could be placed to detect the arrival of train is 5 km from the level cross and for departure of train is 1 Km and thus gate will not be closed for more than 10 minutes [1]. Unmanned railway gate control using Raspberry Pi is mainly focuses on automation of opening and closing of railway gate at the railway level crosses. The system mainly makes use of infrared sensor to detect arrival and departure of train. The operation of the complete system is carried out with the help of Raspberry Pi (B+ module) along the servo motors to operate the railway gate. The components used in this are described in brief below:

Raspberry Pi (B+ Module): Raspberry Pi is a credit card sized, single board computer developed in UK by raspberry pi foundation/ the raspberry pi has Broadcom BCM 2835 system on chip which includes an ARM1176JZF, 700MHz processor, video core IV GPU and was originally shipped with 256 megabytes of RAM, later upgraded to 512 MB. It does not include a built-in hard disk or slid state drive, but uses an SD card an SD card for booting and long term storage.

The main advantage of using Raspberry Pi for this system is its unique feature. The already integrated hardware of Raspberry Pi includes Ethernet, video and audio processing, large quantities of RAM. Programming a raspberry PI module is quite user friendly as compared to other microcontroller programming techniques. Since, Raspberry Pi directly provide facility of interfacing with IR Module, Servo motor module, etc, there is no need of connecting each individual module to be connected separately with main module by using pin and ports available. Thus, Raspberry Pi is perfect SOC which reduces the complex work of circuit wiring, pin connection, soldering etc. Thus testing and Debugging can accomplish in a quick and easy way.

IR Sensor: IR Sensor detects the train by using infra red receiver and transmitter. An IR sensor is an electronic device that emits in order to sense some aspect of surrounding which consist of an IR LED and a photodiode are collectively called photo-coupler or opto-coupler. An IR Sensor can measure the heat of the object as well as detect the motion.

IV. SYSTEM ARCHITECTURE

The system comprises of two IR transmitter and receiver pairs i.e. IR section, Raspberry Pi module, LCD, assembly of LED and servo motor section. This system uses regulated 5V, 1A power supply. 7805 three terminal voltage regulator is used for voltage regulation. Bridge type full wave rectifier

ISSN: 2321-8169
423 - 426

is used to rectify the ac output of secondary of 230/12V step down transformer. The block diagram for system is shown below.

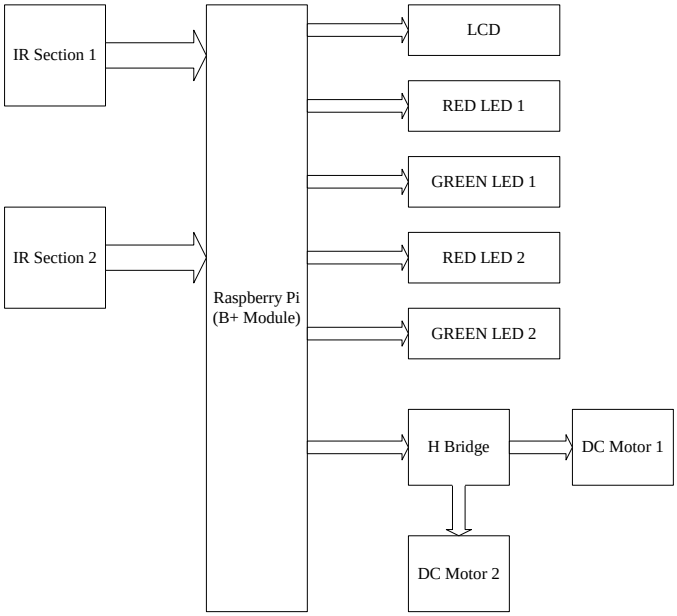

One of the IR section is located at one end of railway gate. The second pair is located at another end of railway gate. In each pair, the transmitter and receiver are arranged face to face across the railway tracks in such away that transmitter is placed on one side of the track and receiver will be there on another side of the track facing towards the transmitter. The receiver should get the signal from the transmitter. The detailed flow is described in flow diagram. Whenever any train is arriving on the track, the IR signal at sensor 1 gets disturbed due to interruption of train. Thus, the Raspberry Pi identifies the arrival of train and before closing the gates issues a siren to alert the people who are on track. After 30 seconds, Raspberry pi issues a command to close the gates by rotating servo motor. When the train is completely passed, it is to be sensed by the second IR sensor which is located the second end of railway gate based upon which the gates will get opened. The second IR sensor identifies train since IR signal gets disturbed when it comes in between transmitter and receiver. Now, the Raspberry Pi will now wait till train gets completely passed which is notified when receiver again gets IR signals. Till this time gate is completely closed, once train left, Raspberry Pi issues command to open gates by rotating servo motor in opposite direction.

For a programming a Raspberry Pi module, the official programming language is Python.

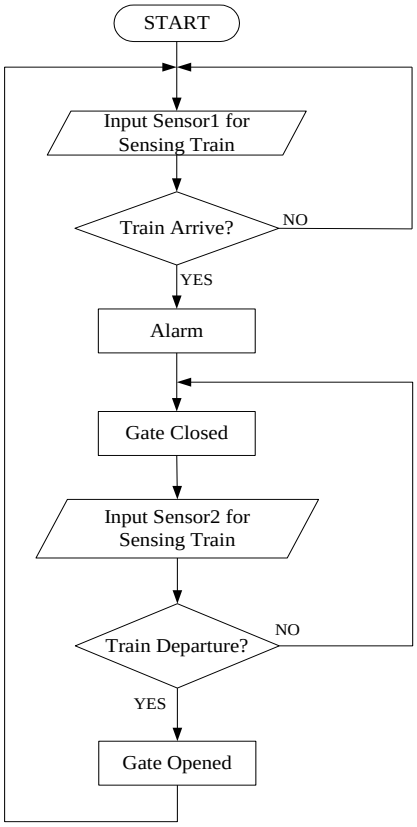

V. Performance Analysis

The automation of railway gate at level crossing is achieved with the help of system which is described in the paper and is mainly based on IR sensor and Raspberry Pi. The prototype model of system is made which consist of IR sensor, Raspberry Pi B+ module, a servomotor, LED and LCD. It also has been observed that the programming a Raspberry Pi module is comparatively easy as compared to other microcontroller programming techniques.

VI. Conclusion and Future Scope

Automatic control of railway gate at level crossing is mainly based on the idea of reducing human interference at level crossing thereby reducing the chances of error which are occurred due to human mistakes. The automation of railway gate ensures that the opening and closing of railway gate should on the right time though there is a delay in train schedule which also helps in considerable reduction of dense traffic jam at railway crossing. Also from the analysis, we can also conclude that the Raspberry Pi is better option for the upcoming technologies and can be as incorporated for as substitute for current microcontrollers.

The working of IR sensor can be major challenge for this system since it can be affected by the animal or any other environmental obstacle. This can be overcome by use of

image processing technique for the implementation of this system.

REFERENCES

[1] Karthik Krishnamurthi, Monica Bobby, Vidya V, Edwin Baby, "Sensor based automatic control of railway gates" International Journal of Advanced Research in Computer Engineering & Technology (IJARCET), Volume 4, Issue 2, February 2015.

[2] Ahmed Salih Mahdi. Al-Zuhairi, "automatic railway gate and crossing control based sensors and microcontroller", International Journal of Computer Trends and Technology (IJCTT), volume 4, Issue 7, July 2013.

[3] Hnin Ngwe Yee Pwint, Zaw Myo Tun, Hla Myo Tun, "Automatic railway gate control system using microcontroller", International Journal of Science, Engineering and Technology Research (IJSETR), Volume 3, Issue 5, May 2014

[4] B. Brailson Mansingh, K. S. Selvakumar, S. R. Vignesh Kumar, "Automation in unmanned railway crossing", Intelligent Systems and Control (ISCO), 2015 IEEE 9th International Conference, ISBN: 978-1-4799-6480-2, 9-10 Jan 2015.

[5] Acy M. Kottalil, Abhijith S, Ajmal M M, Abhilash L. J., Ajith Babu, "Automatic railway gate control system" , International Journal of Advanced Research in Electrical, Electronics and Instrumentation Engineering, Vol. 3, Issue 2, February 2014.

[6] Krishna, Shashi Yadav, Nidhi, "Automatic railway gate control using microcontroller", Oriental Journal Of Computer Science & Technology, ISSN: 0974-6471, December 2013, Volume 6, No. (4), Pgs. 435-440.

[7] Rohan D. Dudam, Mandar C. Koshti, Nirmal Kumar, "Automatic railway gate control system", Unpublished