ISSN: 2321-8169
373 - 377

A Literature Review on Analysis of Different Wavelets for Image Processing Applications

Nishant W. Labade
PG Student Department of E & C, MIT
Aurangabad ,India
nishantlabade@gmail.com

Prof. R. N. Patil
Asso. Professor Department of E & C,
MIT, Aurangabad ,India
rnpatil@gmail.com

Prof. S. R. Deshmukh
Asst.Prof, E & C MGICOET
Shegaon ,India
Snehaldeshmukh23@gmail.com

Abstract: Quaternion Wavelet Transform(QWT) has proven useful for various image processing applications. In this paper, we offer tracking results that highlight ability of the CWT and QWT approach to take care of non-linear movement and time-varying item signatures. In diverse real existence packages such as faraway sensing and clinical photo diagnosis, picture fusion plays vital function and it's miles more famous for picture processing applications. Because of insufficient nature of practical imaging systems, the captured/received pictures are corrupted from diverse noise. Subsequently, fusion of image is an included approach in which elimination of noise and preserving the original functions of photo is important. Image fusion is the technique of extracting meaningful visual information from two or more images and mixing them to form one fused image. Discrete Wavelet transform (DWT) has a extensive range of application in fusion of noise photographs. Real valued wavelet transforms have been used for photo fusion. Even though this approach has supplied enhancements over extra inhabitant methods, it suffers from the shift variance and absence of directionality related to its wavelet bases. These issues were overcome via the usage of a reversible and discrete complex wavelet remodel (the twin Tree complicated Wavelet transform DT-CWT). This paper consequently introduces an alternative shape along with DT-CWT that is more bendy, extraordinarily directional and shift invariant which outperforms the conventional technique in phrases of PSNR and image fine development compared to DWT.

Keywords: *QWT, CWT, PSNR, DWT, shift variance, directionality etc.*

*****

I. INTRODUCTION

Motion Estimates (ME) from picture sequences is of key significance for applications like things monitoring for protection scenarios, activity made up video compression independent car maneuvering, and automated web traffic surveillance[1]-[2]. These scenarios normally call for the ME algorithm to operate on loud imagery generated by cost-effective sensors or atmospheric conditions. Furthermore, complex 3D motion of the things could manifest as time varying item signatures in the estimate plane as well as can consist of short-lived occlusions. Among the difficulties that most ME strategies encounter is that they are incapable to deal with such a wide array of scenarios. We can offer brand-new monitoring results based upon the spatio-temporal constant wavelet change (CWT). Particularly, we show the ability of the CWT method to handle circumstances including time-varying object signatures as well as non time-varying object signatures. The analysis is done for available Wavelets.

The successful fusion of picture images obtained from numerous units is of incredible importance in lots of packages, consisting of clinical imaging, microscopic imaging[1], far off sensing, laptop imaginative and prescient and robotics. Image fusion can be described because the methods by way of which numerous images, or a number of their functions, are blended together to shape a unmarried image. Picture fusion may be carried out at distinct ranges of the information representation[1]-[3]. Extraordinary tiers can be outstanding in step with signal, pixel, function and symbolic stages. To this point, the outcomes of photo fusion in areas along with remote sensing and clinical imaging are typically meant for presentation to a human observer for less difficult and more desirable interpretation. Consequently, the notion of the fused photo is of paramount importance whilst comparing exclusive fusion schemes. While fusion is finished at pixel stage the input snap shots are blended without any pre-processing. Pixel degree fusion algorithms range from very simple, e.g. photo averaging, to very complicated, e.g. important issue evaluation. Pyramid primarily based photograph fusion and wavelet transform fusion[4]. For the reason that DWT has a few issue including much less directional selectivity, shift invariance, aliasing, oscillation of wavelet coefficients and required better computational fee due to especially redundant illustration, those limitations of DWT are triumph over by way of dual Tree complicated Wavelet transform(DT-CWT) up to the first rate quantity. Two-level DWT for a 2D signal is shown in fig-1. Right here on this literature we have proposed a novel method of DT-CWT primarily based photograph fusion method. Even although it has complexity to put into effect but it offers best effects than the Discrete Wavelet transform based picture fusion approach[18].

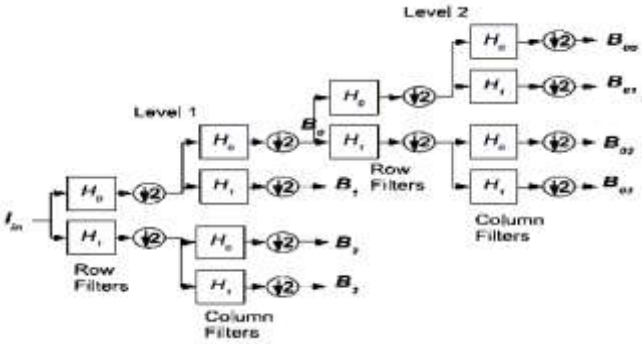

Fig: 1 Two-level DWT for a 2D signal.

II. THE WAVELET TRANSFORMS

A wavelet is a localized function of mean number. Wavelet changes typically incorporate a pyramidal representation of the outcome. We will additionally see examples later on of cases where a set of together smoother variations of an image are not downsampled[1]-[7]. Wavelet changes are computationally effective, and also component of factor for this is that scaling or wavelet feature used is commonly of small support, i.e. specified on a restricted and finite domain. Wavelets likewise usually permit exact reconstitution of the initial data. An enough problem for this when it comes to the constant wavelet transform is that the wavelet coefficients, which permit reconstitution, are of absolutely no mean. Wavelet features are usually wave-like yet clipped to a limited domain, which is why they are so named. A different idea is that of scale-space filtering system. In this technique, the image is smoothed by convolving with a Gaussian kernel of together boosting width at successive ranges. The Gaussian function has been shown to be of many passion for this purpose, because it fulfils the conditions needed for no new framework to be presented at any kind of scale. The idea is that structure ought to be present in the input indicator as well as framework must not be included by the convolutions. Zero-crossings are examined in the context of this strategy[8]-[9]. These are extrema, defined using the second derivative of the signal or its progressively smoothed versions. Compared to various other techniques described right here, the wavelet change can be established really effectively. Unlike scale-space filtering system, it could introduce artifacts. To restrict the retrograde effect of these, we may want to establish, other similar multiscale methods, with particular desirable homes. In many circumstances offer brand-new reworkings of these principles and also methods and also focus highly on applications. Our goal is to explain theoretical bases and to highlight the wide energy and relevance of wavelets and various other associated multiscale changes. To recap the outcomes, we have an excellent measurement actions, the common inconsistency, giving the same efficiency with a DWT, and an excellent ψ-phase procedure, the heavy common discrepancy, completing. QWT size based analysis, that makes the QWT a much better device for appearance classification. By merely concatenating the two measures, producing 18 features, we acquire 69% acknowledgment price with the DWT as well as 79% with the QWT[10]-[14]. The cases where the DWT is little remarkable just correspond to appearances for which the shift invariance is not quite necessary, as well as, which include no sharp contours. These cases might instead be interpreted as a similar performance to QWT, along with those, where the QWT is little superior. In contrast, there are some appearances significantly a lot better recognized by the QWT, specifically with circular patterns, that demonstrates the value of its homes. In fact, a common aesthetic interpretation is difficult to locate. Yet there is not any structure in the Brodatz cd that makes the DWT, truly above QWT. So not just the QWT does much better outcomes, but this new wavelet change likewise maintains the good evaluation residential properties of DWT, making it an actual improvement for an appearance evaluation. Our results are quite good thinking about the heterogeneity of the Brodatz album, although we really did not absorb account the rotation variation of the QWT, as every texture of a very same course has the very same orientation. The monogenic phase of Felsberg and Sommer seems to provide a much better regional summary of 2D indicators. However, in the meantime, to our expertise there exists no monogenic filter bank[12].

In a separable implementation, every degree of the quad-tree contains of levels of filtering. the primary level filters and subsamples the rows of the photograph, generating a pair of horizontal low pass and excessive pass sub-pictures. The second one degree of the remodel filters and sub-samples the columns of the filtered row signal to supply four sub-pictures, denoted B0, . . . ,B3[13]. This separable filtering implementation is the most efficient way to perform the 2nd DWT much like the 1D case, for the multi-level transformation B0 the low skip photograph received from the previous level will become the new input at the next level of the transform. Sub-band B1,B2 and B3 constitute the precise or better pass wavelet coefficients representing the horizontal, diagonal and vertical additives of the input sign. The transform can be in addition prolonged to excessive dimensions by using applying filters to each dimension in flip. For m dimensional indicators 2M sub-band snap shots are produced at every level. The DWT decomposition contains those filters which are the maximum favoured in picture fusion and denoising utility[10]-[11].

III. THE DUAL-TREE COMPLEX WAVELET TRANSFORM

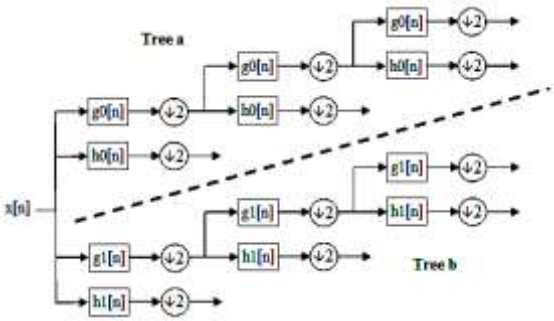

Fig2- a 3-level DTCWT

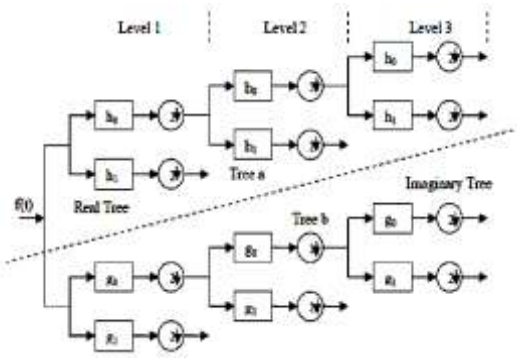

Fig3- a 3-level DT-CWT Analysis Filter bank for decomposition of a 1D signal.

Continuous Wavelet Transform (CWT) is a complex-valued addendum to the accepted Discrete Wavelet Transform (DWT). It is 2D wavelet transform which provides

multiresolution, dispersed representation, and advantageous assuming of the anatomy of an image. Further, it purveys a top amount of shift-invariance in its magnitude, which was advised in. However, a check to this transform is that it exhibits 2^{d} (where d indicates dimension) compared to a adaptable (DWT)[15]-[16]. In the era of computer vision, by exploiting the concept of visual contexts, one can quickly focus on candidate regions.Here, objects of interest may be found, and then compute extra features through CWT for those regions only. Extra features, while not necessary for global regions, are required in correct detection and recognition of smaller objects. Likewise the CWT may be used to detect the activated voxels of cortex and temporal independent component analysis (tICA) may be taken to extract underlying independent sources whose position is calculated by Bayesian information criterion[17].

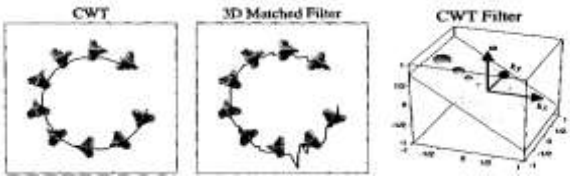

Fig4- Position trajectory obtained with the CWT (left) and 3D matched filtering (right)

IV. Quaterian Wavelet Tranform : QWT

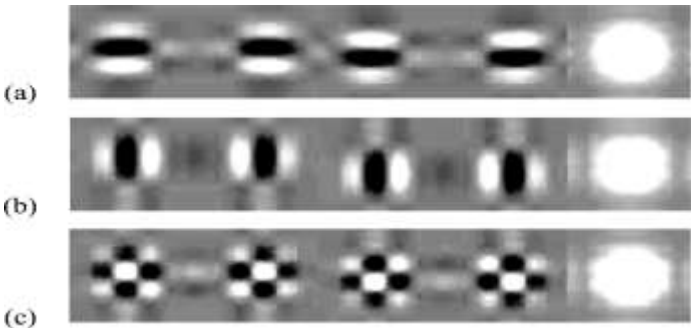

Fig. 3. Three quaternions from the 2-D DT- QWT frame.

The QWT provides a natural multiscale framework for measuring and adjusting local disparities and performing phase unwrapping from coarse to fine scales with linear efficiency that is computational[10]-[11].The convenient QWT encoding of location information in the absolute H/V coordinate system facilitates averaging across subband estimates for more performance that is robust. Our algorithm offers estimation that is sub-pixel and runs faster than existing disparity estimation algorithms like block matching and phase correlation etc. When many sharp edges and features are present and the image that is underlying field is smooth, our method has better performance indices than existing techniques[16]. Previous work in quaternions and the theory of the 2-D HT and signal that is analytic image processing.It includes blows extension of the Fourier transform(FT) and complex Gabor filters(CGF) to Quaternion Fourier transform (QFT).Our QWT can be interpreted as a QFT that is local having many of its interesting and useful properties that are theoretical as the quaternion phase representation, symmetry properties, and shift theorem whereas QWT is dual-tree, a linear-time[9]

In DT-QWT data processing, we can easily find disparities between reference image P(x,y) and image Q(x,y) under investigation[12]-[ ]-[13]. *Disparity estimation* is needed for determining the local translations and alignment of different regions in two images. It is amount of 2-D translation required to move a local region of a targeted image centered at (x',y') to match with the region in a reference image centered at(x',y') i.e., at the same location. It is main drawback in a range of image processing and computer vision undergoing tasks, such as video image processing to find out motion between successive frames, time lapse in seismic imaging to study changes in a reservoir for given interval, medical imaging to monitor a patient's body for given interval , super-resolution case and so on[14]-[15].Iterative algorithm in this case can be modified in subbands and scales by proper interpolation and averaging over estimates from all scales containing the identical image blockset and we can also average estimates from three DT-QWT subbands for the same blocksets to yield more precise estimates. Here one care of omitting few unreliable subband estimates (i.e., H-disparity in the horizontal subband , Υ_1 and V-disparity in the vertical subband,Υ_2).

To calculate the overall function, peak signal-to-noise ratio (PSNR) between the motion compensated image, R(x,y) and the targeted image, Q(x,y) need to be considered as given below with 'M' pixels[13]-[14].

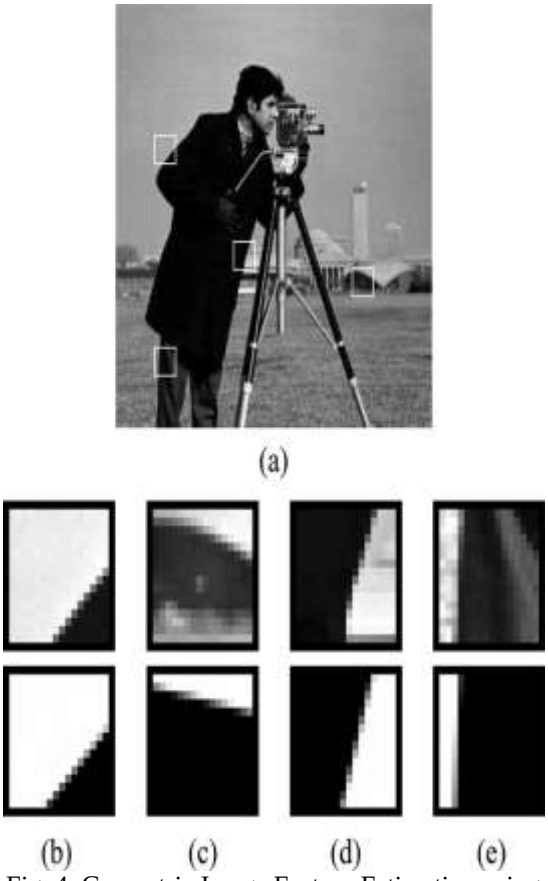

Fig. 4. Geometric Image Feature Estimation using DT- QWT

$$10\log_{10}\left(\frac{(255)^2 M}{\sum_X (Q(x)-R(x))^2}\right)$$

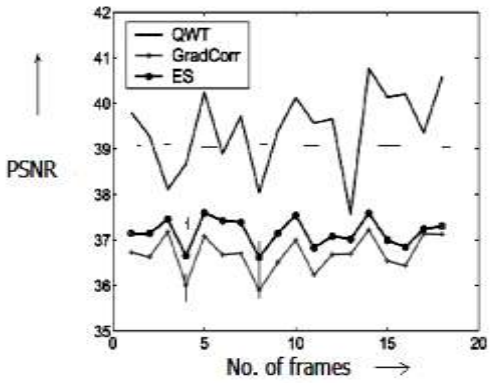

(a)

	QWT	GC	ES
Rubik	39	36	37
Heart	35	35	38
Taxi	36	36	37
Computation cost	$O(M)$	$O(M \log M)$	$O(M^2)$

(b)

Fig-5 Analysis of multiscale QWT, gradient correlation and exhaustive search

V.Result

The performance of DWT fusion method and DT-CWT fusion methods are compared by considering different images. The Synthesized image after DWT fusion method and DT-CWT based fusion methods are carefully observed.The results are shown in table1. It has been observed DT-CWT fusion techniques provide better quantitative and qualitative results than the DWT but it has increased computation. The DT-CWT method is able to maintain edge data without major ringing artifacts. It maintains textures from the input images. All these features contribute to increased shift invariance and orientation selectivity of the DT-CWT when compared to DWT. Hence, it is proved DT-CWT is necessary tool for image fusion and de-noising[11].

Images	Standard Image		Catherine Image		Mask Image	
	PSNR	NCC	PSNR	NCC	PSNR	NCC
DWT	21	0.87	19	0.8	21.8	0.8
DT-CWT	33.5	0.97	31	0.9	32.1	0.9

Comparison evaluation between DWT and DT-CWT Standard, Catherine and Mask image

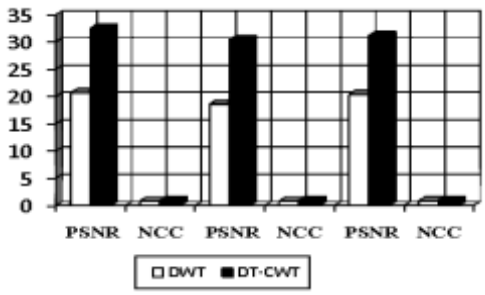

Fig4-Analysis of DWT and DT-CWT

VI. CONCLUSION

New tracking results of the CWT based ME algorithm containing time-varying object signatures and non-linear motionare successfully verified. The implementation approaches that approximate the behavior of the CWT velocity selective filters at a reduced computational cost are also analysed.We have successfully done comparative analysis between wavelet transform fusion methods with the existing fusion techniques. Multi resolution analysis tools such as the complex wavelet transform are best suited for image fusion. Simple DWT method for image fusion have produced limited results and suffers from poor directional ability and shift variant property. The DT-CWT based fusion method is able to retain important edge information without significant humming artifacts. DT-CWT provides increased shift-invariance and orientation selectivity when compared to the DWT. In 2-D MIP , the DT- QWT is useful and efficient method for finding relative location data in images. DT- QWT is based on 2-D HT and 2-D analytic signal as well as on quaternion algebra. The quaternion wavelets includes three phase angles; two of them encode phase shifts in an absolute H/V coordinate system while third encodes textural data.QWT's shift theorem enables analysis of the phase behaviour around boundary regions. QWT has shift-invariance and linear computational complexity during its Dual –Tree implementation approach

ACKNOWLEDGMENT

My sincere thanks to Prof.R.N.Patil my guide and source of inspiration for his valuable insights and guidance; to Prof. Vijaya Kulkarni, HOD, E&C MIT Aurangabad (Mah.) for their support and sincere thanks to Prof. D.P.Tulaskar for his support encouragement and recognition for this work.

REFERENCES

[1] J. Zhou, Y. Xu, and X. K. Yang, "Quaternion wavelet phase based stereo matching for uncalibrated images," Pattern Recognit. Lett., vol. 28, pp. 1509–1522, Mar. 2007.
[2] W. L. Chan, H. Choi, and R. Baraniuk, "Directional hypercomplex wavelets for multidimensional signal analysis and processing," in Proc. IEEE Int. Conf. Acoustics, Speech, Signal Processing, May 2004, pp. 996–999.
[3] I. Selesnick, R. Baraniuk, and N. Kingsbury, "The dual-tree complex wavelet transform," IEEE Signal Process. Mag., vol. 22, no. 6, pp. 123–151, Nov. 2005.

[4] L. Sendur and I. W. Selesnick, "Bivariate shrinkage functions for wavelet-based denoising exploiting interscale dependency," IEEE Trans. Signal Process., vol. 50, no. 11, pp. 2744–2756, Nov. 2002.
[5] J. Weng, "Image matching using the windowed Fourier phase," Int. J. Comput. Vis., vol. 11, no. 3, pp. 211–236, 1993.
[6] B. Zitova and J. Flusser, "Image registration methods:Asurvey," Image Vis. Comput., vol. 21, pp. 977–1000, 2003.
[7] D. J. Fleet and A. D. Jepson, "Computation of component image velocity from local phase information," Int. J. Comput. Vis., vol. 5, no. 1, pp. 77–104, 1990.
[8] W. L. Chan, H. Choi, and R. G. Baraniuk, "Quaternion wavelets for image analysis and processing," in Proc.IEEE Int. Conf. Image Processing, Singapore, Oct. 2004, vol. 5, pp. 3057–3060.
[9] W. L. Chan, H. Choi, and R. G. Baraniuk, "Coherent image processing using quaternion wavelets,"presented at the SPIE Wavelets XI, 2005, vol. 5914.
[10] M. Vetterli and J. Kovacevic, Wavelets and Subband Coding, Prentice Hall, Englewood Cliffs, NJ, 1995.
[11] Stefan L. Hahn, "Multidimensional complex signals with single-orthant spectra," in Proc. of the IEEE, August 1992, vol. 80, pp. 1287–1300.
[12] I. L. Kantor and A. S. Solodovnikov, Hypercomplex Numbers, Springer-Verlag, 1989.
[13] V. Argyriou and t. Vlachos, "Using gradient correlation for subpixel motion estimation of video sequences," IEEE Int. Conf. on Acoustics, Speech, and Signal Processing, pp. 329–332, May 2004.
[14] J. M. Lina and M. Mayrand, "Complex Daubechies wavelets," J. Appl. Harmon. Anal., vol. 2, pp. 219–229, 1995.
[15] B. Belzer, J.-M. Lina, and J. Villasenor, "Complex, linear-phase filters for efficient image coding," IEEE Trans. Signal Process., vol. 43, no. 10, pp. 2425–2427, Oct. 1995.
[16] H. F. Ates and M. T. Orchard, "A nonlinear image representation in wavelet domain using complex signals with single quadrant spectrum," presented at the Asilomar Conf. Signals, Systems, and Computers, 2003.
[17] R. v. Spaendonck, T. Blu, R. Baraniuk, and M. Vetterli, "Orthogonal Hilbert transform filter banks and wavelets," in Proc. IEEE Int. Conf. Acoust., Speech, Signal Processing, Apr. 6–10, 2003, vol. 6, pp. 505–508.
[18] W. L. Chan, H. Choi, and R. G. Baraniuk, "Quaternion wavelets for image analysis and processing," in Proc.IEEE Int. Conf. Image Processing, Singapore, Oct. 2004, vol. 5, pp. 3057–3060.
[19] W. L. Chan, H. Choi, and R. G. Baraniuk, "Coherent image processing using quaternion wavelets,"presented at the SPIE Wavelets XI, 2005, vol. 5914.
[20] M. Vetterli and J. Kovacevic, Wavelets and Subband Coding, Prentice Hall, Englewood Cliffs, NJ, 1995.
[21] Stefan L. Hahn, "Multidimensional complex signals with single-orthant spectra," in Proc. of the IEEE, August 1992, vol. 80, pp. 1287–1300.
[22] I. L. Kantor and A. S. Solodovnikov, Hypercomplex Numbers, Springer-Verlag, 1989.
[23] V. Argyriou and t. Vlachos, "Using gradient correlation for subpixel motion estimation of video sequences," IEEE Int. Conf. on Acoustics, Speech, and Signal Processing, pp. 329–332, May 2004.
[24] J. M. Lina and M. Mayrand, "Complex Daubechies wavelets," J. Appl. Harmon. Anal., vol. 2, pp. 219–229, 1995.
[25] B. Belzer, J.-M. Lina, and J. Villasenor, "Complex, linear-phase filters for efficient image coding," IEEE Trans. Signal Process., vol. 43, no. 10, pp. 2425–2427, Oct. 1995.
[26] H. F. Ates and M. T. Orchard, "A nonlinear image representation in wavelet domain using complex signals with single quadrant spectrum," presented at the Asilomar Conf. Signals, Systems, and Computers, 2003.
[27] R. v. Spaendonck, T. Blu, R. Baraniuk, and M. Vetterli, "Orthogonal Hilbert transform filter banks and wavelets," in Proc. IEEE Int. Conf. Acoust., Speech, Signal Processing, Apr. 6–10, 2003, vol. 6, pp. 505–508.