ISSN: 2321-8169
250 - 253

Review on Comparitive Analysis of Image Compression Technique's

Miss. Sheetal N. Pore
E&TC department
MGICOET, Shegaon
sheetalpore777@gmail.com

Miss. Priyanka S. Barapatre
E&TC department
MGICOET, Shegaon
priyanka212patre@gmail.com

Miss. Kajal P. Visrani
CSE department
GHRIEM, Jalgaon
kajal.visrani@gmail.com

Prof. Rahul P. Tolankar
CSE department
MGICOET, Shegaon
rahultolankar@yahoo.com

Prof. Shilpa S. Redekar
CSE department
MGICOET, Shegaon
shilparedekar3@gmail.com

Abstract- With the growth of multimedia technology over the past decades, the demand for digital information increases drastically. Image compression is a method through which we can reduce the storage space of images which will helpful to increase storage and transmission process's performance. Image compression is a mapping from a higher dimensional space to a lower dimensional space. It plays an important role in many multimedia applications. The basic goal of image compression is to represent an image with minimum number of bits of an acceptable image quality. In this paper we compare the various image compression techniques, such as lossy and lossless compression.

Keywords- *Image compression techniques, Runlength coding, Huffman coding, LZW coding, Area coding, Transform coding, Block Truncation coding, Sub-band coding, Vector Quantization.*

*****

I. INTRODUCTION

An image is define as a two dimensional view of any scene that represents measure of some characteristics such as brightness or color. When the image is capture from the camera the image is in analog form. For transmitting and storage purpose it is necessary to convert that analog image into digital one. Figure (1) [16]. shows the analog to digital image conversion. Digitalization of an analog signal involves two operations:

- Sampling, and
- Quantization

Both operations correspond to a discretization of a quantity, but in different domains.

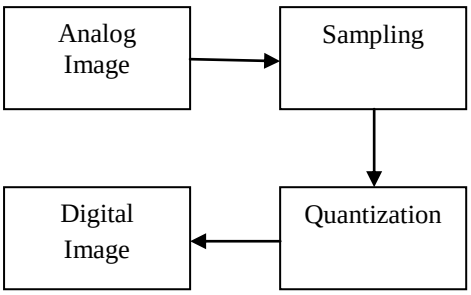

Figure 1. Analog to Digital image conversion

- Sampling: Digitizing the co-ordinates value is called sampling.
- Quantization: Digitizing the amplitude value is called quantization.
- A scan line is selected to scan the voltage level for given image as shown in figure (a).
- Figure (b) represents a plot of amplitude value of a continuous image along the line segment AB.
- To sample the function, we take equally spaced sample along line AB as shown in figure (c).
- The right side of figure (c) shows the intensity scale divided into eight discrete interval, ranging from black to white.
- The digital samples resulting from sampling and quantization are shown in figure (d).

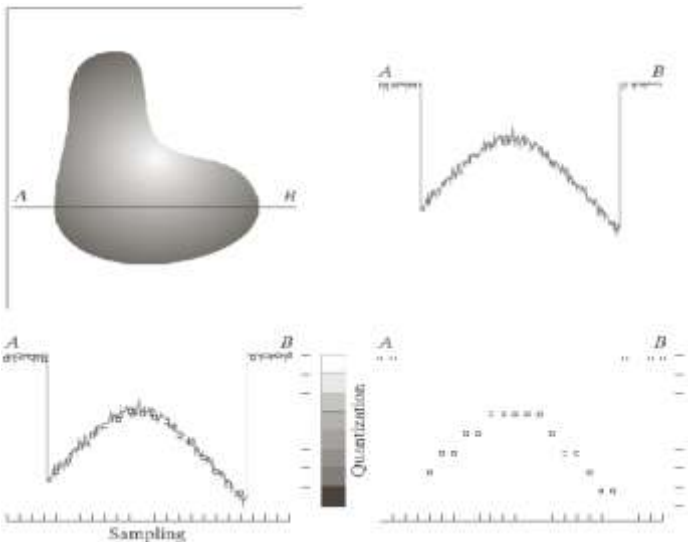

Figure 2. Generating a digital image (a) continuous image (b) a scan line from A to B in the continuous image, used to illustrate the concepts of sampling and quantization (c) Sampling and Quantization (d) Digital scan line [13]

Compression is one of the major image processing techniques. Image compression has two main components: redundancy reduction and irrelevant data reduction. Redundancy means duplication and irrelevancy means the part

ISSN: 2321-8169
250 - 253

of the image information that will not be notice by the human visual system.

II. TYPES OF IMAGES

There are mainly two broad types of images such as Analog image and Digital image.

Analog image: It is the pictorial representation of data represented in analog wave format that can be named as analog image.

Digital image: If x, y and amplitude value of f are finite and discrete quantity then we call the image as a digital image.

Types of image based on pixel value and intensity values:

1. Binary image: It is an image represented in binary values that is '0' and '1', where '1' represent brightness and '0' represent darkness. Binary image is also known as black and white image.
2. Array Scale image: It is an image where pixel range varies from '0' to '255', where '0' represent dark values and '255' represent bright values.
3. Color image: An image in which the color of scene is stored in terms of intensity consisting of the color combination of red, green and blue (RGB).
4. Volume image: A three dimensional image is an example of volume image. The volume image can be obtained from some medical imaging equipment in which individual data points are called "voxel". Voxel's stands for volume pixel.

III. NEED OF IMAGE COMPRESSION

When we want to store a large size of image we required a large amount of memory. For storing these types of images a large amount of bandwidth is required. Due to this drawback the image can take more time to transmit from one device to other device, that is uncompressed image reduce the speed of transmission and also required large memory.

The solution for this problem is compressed the image. For efficient transmission and storage of images the image-compression is very important.

IV. COMPRESSION TECHNIQUES

There are many compression techniques available, but we need to develop faster and more strong and healthy techniques to compress images.

In this paper we study different types of image compression techniques. The image compression techniques can be classified into two categories,

A. Lossless compression
B. Lossy compression

In lossless technique there is no loss of information that means from the compressed image we can perfectly recover the original image. While in lossy compression the compressed image is not same as input image. In the lossy compression technique some amount of information is loss. In this method we cannot get the original image.

A. Lossless compression

In lossless compression techniques, the reconstructed image is same to input image. This techniques is free from noise since noise signal do not add to the image hence this method is also known as 'noiseless'. In lossless compression, during the decomposition process every bit of information is preserved. Lossless compression is shown in figure (3) [13]. Lossy compression can achieve a high compression ratio, 50:1 or higher, since it allows some acceptable degradation. On the other hand, lossless compression can completely recover the original data but this reduces the compression ratio to around 2:1. It is used in ZIP file format and in GNU tool gzip.

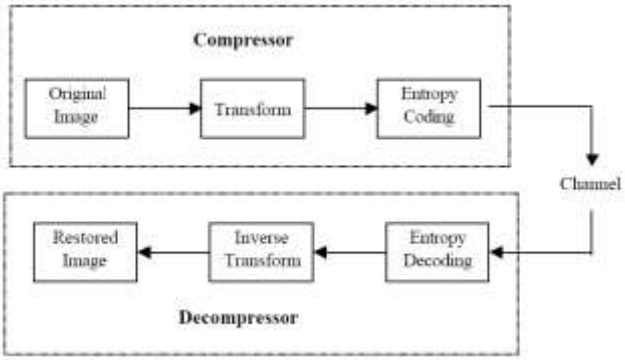

Figure 3. Lossless compression

Lossless compressors are usually two-step algorithms. The first step transforms the original image to some other format in which the inter-pixel redundancy is reduced. The second step uses an entropy encoder to remove the coding redundancy. The lossless decompressor is a perfect inverse process of the lossless compressor. Lossless compression works best with decorrelated data. Image Compressor reduces the size of JPEG file by analyzing every pixel in the image. The lossless decompressor is a perfect inverse process of the lossless compressor.

In lossless compression the following techniques are included.

1. Run Length encoding
2. Huffman coding
3. LZW coding
4. Area coding

1. Run Length encoding

In case of repetitive data the run length compression is useful. The term run represents the repetition of symbols. When long sequences of the same symbols occurs at that time the run length coding is very effective.

2. Huffman coding

Huffman coding is based on the probabilities or statistical occurrence frequencies. In Huffman encoding, for the repeated pixel value the higher bit code is given and for the pixel values the smaller bit code is given. By removing the irrelevant information the Huffman coding can reduce the file size up to 50%. In the baseline sequential codec, Huffman coding is used.

3. Lempel-Ziv-Welch coding

This type of coding technique is very useful. LZW technique is independent of the source statistics. This techniques belong to a class of universal source coding algorithm. LZW is of two types, static and dynamic. It is dictionary based coding. When new word is introduced the

ISSN: 2321-8169
250 - 253

dictionary is updated in dynamic coding. Dictionary is fixed in static coding. This technique is widely used in compression of computer files.

4. Area coding

The enhanced version of Run length coding of image compression is area coding. It is a non-linear method, due to this reason it cannot be implemented in hardware. Area coding gives better compression ratio. This method is highly effective.

B. Lossy compression

In lossy compression, the reconstructed image contains degradations with respect to the original image. Higher compression ratio can be achieved by lossy compression. It reduces a file by permanently eliminating certain information. Lossy compression is generally used for video and sound. Lossy compression is shown in figure (4) [13].

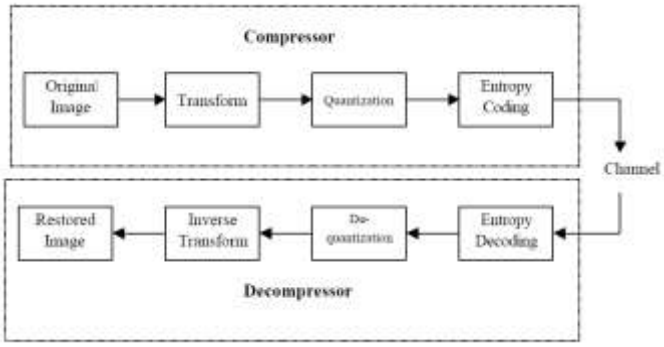

Figure 4. Lossy compression

The first stage is a transform to eliminate the inter-pixel redundancy to pack information efficiently. Then a quantizer is applied to remove psycho-visual redundancy to represent the packed information with as few bits as possible. The quantized bits are then efficiently encoded to get more compression from the coding redundancy. This methods are suitable for natural images, such as photograph in application where minor loss of data is acceptable. There are different types of lossy compression techniques which are as given below:

1. Transform coding
2. Block Truncation coding
3. Sub-band coding
4. Vector quantization

1. Transform coding

In image coding application the most popular method is transform coding. In transform coding large set of highly correlated pixel is converted into a smaller set of uncorrelated coefficient. Transform coding does not required a large bandwidth. This method is used to transform the image data in time domain to frequency domain.

2. Block Truncation coding

In this method, the image can be divided into blocks. The size of block is 3*3 or 4*4 pixel [16]. We can achieve the greater compression ratio from larger block but it reduce the quality of an image. In block truncation coding, coding of each block is totally independent.

3. Sub-band coding

Sub-band coding is a powerful and general method of encoding audio signals. It can encode any signal from any source. Sub-band coding is a technique of decomposing the source signal into constituent part separately. Transform coding is a special case of sub-band coding. High pass filter and low pass filter are used in sub-band coding. Sub-band coding is used in,

1. Speech coding
2. Audio coding
3. Image compression

4. Vector quantization

In vector quantization coding the block of data can be quantizes instead of single sample. Vector quantization is used when the source output shows high degree of clustering. Vector quantization can also be used to compress an image both in spatial domain and in the frequency domain. From vector quantization we can achieved a greater compression ratio.

V. PRESENT AND FUTURE TRENDS

Image compression is comes from information theory, where we rejected the redundant data. Today image compression is centered in lossy and lossless both of compression techniques according to its application. For Medical image, remote sensing imaging or other important image we use generally lossless technique. At present time in image compression stream wavelet-based 2-D image compression technique are popular. Future of image compression is progressive for 2-D image and its goes on 3-D image compression also. For 3-D image compression as well as video compression used 3-dimensional mathematical Transforms with encoding techniques. In future image compression centered high compression ratio with quality improvement.

VI. APPLICATION

1. Image compression is used to increase the efficiency of sharing and viewing personal images.
2. It is used in security industry.
3. In certain industries, the archiving of large number of images is required.
4. Image compression is also useful to any organization that requires the viewing and storing of images to be standardized. [5]

Figure 5. This is a picture of a famous mathematician: Emmy Noether compressed in different ways

VII. CONCLUSION

In this article we have reviewed and emphasized on lossy coding algorithm and lossless coding algorithm along with their types. From the above discussion, we conclude that the lossless compression technique is better because it gives greater efficiency than lossy compression technique. And also we conclude that both the compression algorithm depends on quality of image, amount of compression and speed of compression. Analysis and comparison of these compression techniques can also be possible by using DCT, DWT, Harr filtering techniques.

REFRENCES

[1] Miss. Chaitali A. Sarode, Prof. S. V. Patil, "A Review on Image Compression Techniques", International Research Journal of Engineering and Technology (IRJET) e-ISSN: 2395-0056 | p-ISSN: 2395-0072, Volume: 03 Issue: 04 | April-2016

[2] Rajandeep Kaur, Pooja Choudhary, "A Review of Image Compression Techniques", International Journal of Computer Application (0975-8887) Volume 142-No. 1, May 2016

[3] A.M.Raid, W.M.Khedr, M.A.El-dosuky and Wesam Ahmed, "Jpeg Image Compression Using Discreate Cosine Transform- A Survey", International Journal of Computer Science & Engineering Survey (IJCSES) Vol.5, No.2, April 2014

[4] Basavaprasad B, Ravi M, "A Study On The Importance Of Image Processing And Its Apllications", IJRET: International Journal of Research in Engineering and Technology eISSN: 2319-1163 | pISSN: 2321-7308, Volume: 03 Special Issue: 03 | May-2014 | NCRIET-2014

[5] Monika Rathee, Alka Vij, "Review of Image compression Techniques Based on Orthogonal Transforms", International Journal of Engineering Science and Innovative Technology (IJESIT) Volume 3, Issue 4, July 2014

[6] Asha Lata, Permender Singh, "Review of Image Compression Techniques", International Journal of Emerging Technology and Advanced Engineering, ISSN 2250-2459, ISO 9001:2008 Certified Journal, Volume 3, Issue 7, July 2013

[7] Mr. Chandresh K. Parmar, Prof. Kruti Pancholi, "A Review on Image Compression Techniques ", ISSN: 0975-6736| NOV 12 TO OCT 13| VOLUME – 02, ISSUE – 02

[8] M. Marimuthu, R. Muthaiah and P. Swaminathan, "Review Article: An Overview of Image Compression Techniques", Research Journal of Applied Sciences, Engineering and Technology 4(24): 5381-5386, 2012, ISSN: 2040-7467, Published: December 15, 2012

[9] Sachin Dhawan, "A Review of Image Compression and Comparison of its Algorithms", ISSN : 2239-7109(Online)| ISSN 2230-9543(Print), |JECT Vol. 2, Issue |, MARCH 2011

[10] Jagadish H. Pujar, Lohit M. Kadlaskar, "A New Lossless Method of Image Compression And Decompression Using Huffman Coding Techniques", Journal of Theoretical and Applied Information Technology © 2005 - 2010 JATIT

[11] Sonal, D. K. 2007. A study of various image compression techniques. COIT, RIMT-IET. Hisar

[12] Subramanya A, "Image Compression Technique", Potential IEEE,Vol.20 Issue1,pp.19-23, Feb-March 2001

[13] António R. C. Paiva, "Image representation, sampling and quantization", ECE 6962 – Fall 2010

[14] Chapter 2 Digital Image Compression, web search

[15] R. C. Gonzalez and R. E. Woods, "Digital Image Processing",Third Edition

[16] William K. Pratt, "Digital Image Processing PIKS Scientific Inside", Forth Edition

[17] Anil K. Jain, "Fundamentals of Digital Image Processing", PHI

[18] S Jayaraman, S Esakkirajan and T Veerakumar, "Digital Image Processing", Mc Graw Hill Education