ISSN: 2321-8169
280 – 283

Air Quality Monitoring and Analysis Using Wireless Sensor Node

Afrah Mohammad
Dept. of electronic and communication engg
Anjuman college of engineering and technology
Nagpur, India
afrahmohammad7@gmail.com

Prof .M.T.hasan
Dept. of electronics and communication engg
Anjuman college of engineering and technology
Nagpur, India
mthasan21@gmail.com

***Abstract*—** The main objective of this project is to devise a simple low cost microcontroller based air pollution monitoring system using wireless technology which finds presence of various gases like CO2,SO,NO,etc and parameters like humidity ,temperature ,etc. , displays it on LCD and forwards it to remote user. This project is developed by using PIC 16F877A Microcontroller, SIM 900 GSM Module, JHD204A LCD display and gas sensors. The advantage of using GSM based technology is that GSM based communication network is distributed over a large area and have almost reached to every part of this 21st century world. GSM technology also do provide users with high quality signal and channels, giving them access to high quality digital communication at very affordable cost.

This embedded system can prove to be useful for anyone who wish to monitor the quality of air at a location without being physically present there .The main advantages of the research are that the system may be able to collect the pollution levels throughout the 24 hours of the day and that the data so collected may serve as a data base which can be used for various analysis whenever required .The system may offer pollutant levels of a particular industry and this estimation may serve as an enchiridion to the government for allowing or disallowing a particular industry to be set up in a particular area.

*****

I. INTRODUCTION

Air quality monitoring and analysis is the need of the hour. Air quality measurements can also be processed and presented in real-time to end users to spread environmental awareness. The monitoring of pollution level in the atmosphere is of significance especially to those residents living in a city. Reasonable sitting air quality monitoring stations is an important task for environmental protection authorities and department, involving: (1) Ensuring that the air quality standard is achieved; (2) planning and implementing air quality protection and air pollution control strategies; and (3) preventing or responding quickly to air quality deterioration. Therefore, the environmental protection department need to site air quality monitoring stations effectively. Bulky air quality monitoring stations are traditionally used for measuring the concentrations of certain pollutants of interest. These stations are large in size, costly, require frequent maintenance and calibration and have high power requirement. They are also powered by the mains power grid. With the advances in micro-electro-mechanical (MEMS) systems, deployment of sensing stations with low cost and smaller size presents a more attractive solution . Large number of such stations can be deployed to form a wireless sensor network (WSN) and can also be powered by solar panels. Lots of work has been done in this area where sensor network have been deployed and using artificial neural networks (ANNs) problems related to sensor dependency on the ambient temperature and relative humidity has been carried out. Researchers have devised pollution models based on emission distribution and have also developed an auto calibration method for air quality sensor networks based on mobile sensors . Such wireless network have been put to use to asses air pollution problems. The specific objective of the research is to develop an air pollution monitoring system which is able to measure the level of different gases in atmosphere and forward that information wirelessly to base station, where this information can be stored, processed, and analyzed and presented to the end user

II. LITERATURE REVIEW

In [1] a new system has been proposed. The technique of differential optical absorption spectroscopy (DOAS) is applied to monitor concentrations of nitrogen dioxide (NO2) and aerosol, the major pollutants in the urban atmosphere. Two DOAS paths with optical distances of a few kilometers have been set up in the Chiba city area. The spectra of visible radiation emitted from xenon flashlights installed on tall constructions are analyzed in comparison with the laboratory spectrum of NO2. The intensity stability of the light sources enables the retrieval of aerosol extinction along the paths. It is found that the temporal behavior of both pollutants is similar to those observed at nearby ground sampling stations, though the effect of difference in the observation height often appears. Wind Doppler lidar measurement has also been undertaken from an observation site near an industrial complex along the Tokyo Bay, suggesting the influence of wind direction on the pollutant concentrations observed in the region.

In [2] with further more enhancement in this area a new method for air pollution monitoring has been introduced using a surveillance camera .Various studies showed that inhaled fine particles with diameter less than 10 micrometers (PM10) in the air can cause adverse health effects on human, such as heart disease, asthma, stroke, bronchitis and the like. This is due to their ability to penetrate further into the lung and alveoli. The aim of this study is to develop a state-of-art reliable technique to use surveillance camera for monitoring the temporal patterns of PM10 concentration in the air. Once the air quality reaches the alert thresholds, it will provide warning alarm to alert human to prevent from long exposure to these fine particles. This is important for human to avoid the above mentioned adverse health effects. In this study, an

ISSN: 2321-8169
280 – 283

internet protocol (IP) network camera was used as an air quality monitoring sensor. It is a 0.3 mega pixel Charge-Couple-Device (CCD) camera integrates with the associate electronics for digitization and compression of images. This network camera was installed on the rooftop of the School of Physics

In [3] a new system has been derived to design and implement stations based on wireless sensor network technology .Nowadays, air pollution is monitored with accurate, but large-sized measurement stations, leading to an overall limited number of monitored locations. Combining these stations, with a higher number of less accurate stations can provide additional information, such as with regards to pollutant distributions. In this paper we present the design, implementation and initial results of such stations based on Wireless Sensor Network technology. For the implementation of the network purely off the-shelf equipment was chosen, which allows us to analyze the current status of commercially available Wireless Sensor Network technology. While the system was fully implemented and demonstrated operationally, the experiences found during the project showed a limited matureness with regards to the off the- shelf equipment and uncovered flaws in typical assumptions underlying Wireless Sensor Network research

III. SYSTEM HARDWARE ARCHITECHTURE

Our air pollution monitoring System is an automated version of monitoring the quality of air and sending the information to a distant database wirelessly. Three to four wireless sensor stations will be deployed at three to four different places. These sensors will record the pollutant levels of gases like CO, SO and NO and relay the information through Internet/GSM network to the base station. The data received at the base stations will be arranged in a data base. The data so collected will then be processed and it involves validation, verification, standardization, normalization, aggregations and transformations. After the data is suitably processed the data prediction and analysis will be carried out. Finally conclusion, regulations and recommendations will be proposed. The communication protocol will serve as a mediator between the end user and the data base server.

Our system has got almost all things automated so that we get an advantage of this concept i.e. the real time direct measurement of the parameters (here air quality) through GSM/PC. Maintaining backup of sent data is easy and can be done within a few seconds. This model uses gas sensors, GSM module (SIM900), LCD JHD 162A and a PIC 16F877 microcontroller. The GSM module is connected to PC through RS232 cable. The system model is shown in Figure 3.1 which says about the connectivity of all mentioned devices. The LCD is attached to PIC 16F877 to simultaneously display the measured temperature, through which we can experimentally check whether the data that is being sent is correct .

The proposed system is designed by integrating the following hardware modules shown in figure 1. As the figure 1 shows, the system consists of a PIC16F877A microcontroller integrated with a sensor array using analog ports. The hardware unit is also connected to a GPS module and a GSM-Modem using the RS-232 interface. Each of these components is described below:

1. PIC16F877A microcontroller

The PIC16F877A microcontroller is the main component of a pollution detection unit . The operating system that runs inside the chip coordinates the substances measurement process, the acquisition of the GPS coordinates and the data transmission to the central server. The microcontroller is mounted on a development board that provides an RS232 serial communication to the GSM modem and GPS receiver and a parallel connection to the gas sensors. The connection between the gas sensors and the PIC16F877A microcontroller can't be made directly because of the very small output voltages provided by the sensors (mA).This problem is solved by using auxiliary electronic circuits for signal conversion like OA (Operational Amplifiers) and transistors.

2. Sensors Array

The sensor array consists of three air pollutions sensors including Carbon Dioxide (CO2), Nitrogen Dioxide (NO2), and Sulfur Dioxide (SO2). The resolution of these sensors is sufficient for pollution monitoring. Each of the above sensors has a linear current output in the range of 4 mA–20 mA. The 4 mA output corresponds to zero-level gas and the 20 mA corresponds to the maximum gas level. A simple signal conditioning circuit is designed to convert the 4 mA–20 mA range into 0–5 V to be compatible with the voltage range of the built-in analog-to-digital converter in the PIC microcontroller.

3. GPS Receiver

The GPS module provides the physical coordinate location of the mobile-DAQ, time and date in National Marine Electronics Association (NMEA) format. NEMA format includes the complete position, velocity, and time computed by a GPS receiver where the position is given in latitude and longitude. The data packet from the GPS-Module includes an RMS Header followed by UTC time, data validity checksum,latitude, longitude, velocity, heading, date, magnetic variation and direction, mode, and checksum. The only information required for the proposed system is date, time, latitude and longitude. The GPS modem is interfaced with the microcontroller using the RS-232 communication standard.

ISSN: 2321-8169
280 – 283

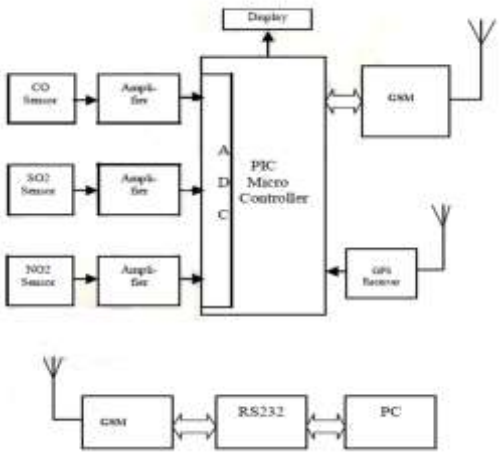

Figure 1 : Block Diagram Of Proposed Air Quality Monitoring System

4. GSM Modem

The GSM net used by cell phones provides a low cost, long range, wireless communication channel for applications that need connectivity rather than high data rates. Machinery such as industrial refrigerators and freezers, HVAC, vending machines, vehicle service etc. could benefit from being connected to a GSM system. This application note describes how to use an AVR to control a GSM modem in a cellular phone. The interface between modem and host is a textual protocol called Hayes AT-Commands. These commands enable phone setup, dialing, text messaging etc. This particular application connects an AVR Butterfly and Siemens® M65 cellular phone using a RS232 based data cable. Most cellular phones could be used, except Nokia® phones using F or M-bus.

5. Central Server

The Central-Server is an off-the-shelf standard personal computer with accessibility to the Internet. The Pollution-Server is connected to the GSM Modem via RS- 232 communication standard. The air pollution information sent from GSM transmitter is collected to the GSM receiver and then the data is saved to database of central server.

Clients such as the municipality, environmental protection agencies, travel agencies, insurance companies and tourist companies can connect to the Central-Server through the Internet and check the real-time air pollutants level using a normal browser on a standard PC or a mobile device. The Pollution- Server can be physically located at the Environmental Protection Agency (EPA) or similar government agencies.

III. SOFTWARE MODULE

The program is written in Embedded C in MPLAB IDE. MPLAB is an Integrated Development Environment (IDE) for the development of embedded applications on PIC microcontrollers and is developed by microchip technology .MPLAB support project management, code editing, debugging and programming of Microchip 8-bit,16-bit and 32-bit microcontrollers. The HEX file is dumped into the PIC 16F877 microcontroller using Top Win programmer.

IV. CONCLUSION

The project deals with designing a simple and low cost weather monitoring system using gas sensors, LCD JHD204A ,GSM SIM900 and PIC 16F877 microcontroller unit to monitor the quality of air of the desired location and transmit it to a distant location wirelessly. The designed product module is at prelim stage and designed only for air quality monitoring but can be enhanced for monitoring other different type of environmental and climatic behavior of a location, which also can be cost effective.

V. REFERENCES

[1] Hiroaki Kuze,Yutaro Goto,Yusaku Mabuchi,Hayato Saitoh,Ilham Alimuddin,Gerry Bagtasa,Ippei Harada,Toshihiko Ishibashi,Takuma Tsujimoto And Shumpei Kameyama, “Urban Air Pollution Monitoring Using Differential Optical Absorption Spectroscopy (DOAS) And Wind Lidar”,IGARS 2012, p.p 3638-3641.

[2] C. J. Wong, M. Z. MatJafri, K. Abdullah, H. S. Lim and K. L. ,“Temporal Air Quality Monitoring Using Surveillance Camera”

[3] Sebastian Bader, Mathias Anneken, Manuel Goldbeck and Bengt , “SAQnet: Experiences From The Design Of An Air Pollution Monitoring System Based On Off-The-Shelf Equipment”,ISSNIP 2011 IEEE,p.p 223-228

[4] Zhixian Yan, Julien Eberle and Karl Aberer , “OptiMoS: Optimal Sensing for Mobile Sensors”,2012 IEEE 13th International Conference On Mobile Data Management.

[5] Zhou Guobing and Wang Shigong , “The Research Of Urban Air Pollution Weather Characteristics Under The Special Terrain”,2010 International Conference On Digital Manufacturing And Automation.

[6] Elias Yaacoub, Abdullah Kadri, Mohammed Mushtaha, and Adnan Abu-Dayya, “Qatar,Air Quality Monitoring and Analysis in Qatar using a Wireless Sensor Network”, IEEE 2013,p.p. 593-601

[7] Kai Wang,Yanan , Ding,Hong Zhao , Lujian Hou,Fengjuan Sun , “Optimization Of Air Pollutant Monitoring Stations Based On Genetic Algorithm”, 2013 4th International Conference On Emerging Intelligent Data And Web Technologies.

[8] Nihal Kularatna and B. H. Sudantha, “An Environmental Air Pollution Monitoring System Based on the IEEE 1451 Standard for Low Cost Requirements”,IEEE Sensors Journal, vol 8,no. 4,april 2008.

[9] Young Jin Jung, Yang Koo Lee, Dong Gyu Lee, Keun Ho Ryu, Silvia Nittel “Air Pollution Monitoring System Based On Geosensor Network”,IGARS, p.p. 1370-1373,2008.

[10] Florin Caldararu, Alexandru Vasile and Mira Caldararu, “Autonomous System For Real Time Air Pollution Monitoring Using Semiconductor Toxic Gas Sensors”,24th International Spring Seminar On Electronics Technology,ISSE-2001,May 5-9,2001,Romania

[11] Manik Gupta, Lamling Venus Shum, Eliane Bodanese and Stephen Hailes, “Design and Evaluation of an Adaptive Sampling Strategy for a Wireless Air Pollution Sensor Network”,6th IEEE International Workshop On Practical Issues In Building Sensor Network Applications,p.p.1003-1010,2011

[12] Jong-Won Kwon,Yong-Man Park, Sang-Jun Koo and Hiesik Kim , “Design of Air Pollution Monitoring System

ISSN: 2321-8169
280 – 283

using ZigBee Networks for Ubiquitous-City",2007 International Conference On Convergence Information Technology,p.p.1024-1031,2007

[13] World Health Organization (WHO), "Monitoring Ambient Air Quality for Health Impact Assessment", WHO Regional Publications, European Series, No. 85,1999.

[14] O. A. Postolache, J. M. Dias Pereira, and P. M. B. Silva Gir˜ao, "Smart Sensors Network for Air Quality Monitoring Applications", IEEE Transactions on Instrumentation and Measurements., vol. 58, no. 9, p.p. 3253- 3262, 2009.

[15] W.Tsujita, H. Ishida, and T.Moriizumi, "Dynamic gas sensor network for air pollution monitoring and its auto-calibration", In Proc. IEEE Sensors, vol.1, p.p. 56-59, 2004.