Review on Performance Analysis of Various Active Power Filters

Mr. Shashibhushan R. Shahu
P. G. Student
Department of Electrical Engineering
S. D. College of Engineering, Selukate Wardha
bhushan.shahu@gmail.com

Mr. Nikhil A. Wanjari
Assistant Professor
Department of Electrical Engineering
S. D. College of Engineering, Selukate Wardha
wanjarinikhil1@gmail.com

Abstract - Active filtering of electric power has now become a established technology for harmonic and reactive power compensation in two-wire (single phase), three-wire (three phase without neutral), and four-wire (three phase with neutral) ac power networks with nonlinear loads. This paper comparative review of the performance analysis of single phase Shunt Active power filter (SAPF) verses Hybrid Active Power Filter (HAPF) To overcome the difficulty due to harmonics, Active Power Filters (APFs) are used with various control schemes. But Hybrid Active power filter is a power electronic device which has both the characteristics of passive power filters and active power filters, helps in elimination of the harmonics by producing compensating signal. The objective is to select the scheme which provides improved output current harmonics.

Index Terms - *Active Power Filters (APFs) Shunt Active Power Filter (SAPF); Hybrid Active power filter (HAPF)*

*****

I. INTRODUCTION

Technological advancement leads to increase in use of nonlinear loads which leads to degradation in power quality. The economic activities depend on electrical energy quality and efficiency. Both industrial and commercial users are interested in electrical waveform quality, which supplies their different systems. Harmonics are the major problems associated with these nonlinear loads. Many researchers have been working for the elimination of harmonics in power systems due to nonlinear loads. With generally application of power electronic devices and other non-linear loads in the distribution end nowadays more and more harmonic and reactive current are injected into the electrical network, resulting in the worry about the secure operation of the utility and the normal utilization of other related apparatus. The harmonic containment and var compensation is becoming a very important research hotspot in the field such as power electronics, electrical system, industrial electronics and electrical automation. The main power quality solution for harmonic effluence is by means of passive power filter, active power filter or hybrid active power filter.APF is a kind of power electronic device which can dynamically suppress the harmonic and compensate the reactive current. Compared with passive power filter.APF is often considered as an ideal power quality device with better compensating characteristics.

A. Shunt Active Power Filter

The structure of a three-phase shunt APF is mainly made up of a voltage source converter with a large capacitor to maintain the voltage constant at the DC side and three inductors to output the compensation current at the AC side in connection with the utility. In fact, this kind of APF in nature is Boost circuit as the same as the high frequency reversible PWM rectifier, which means the DC voltage level must be higher than the peak-to-peak value of the utility line-to-line voltage so as to control the output current completely. Three IGBT semiconductor switching.

B. Hybrid Active Power Filter

In HAPF the harmonics filtering task is divided between the two filters. The APF cancels the lower order harmonics, while the PPF filters the higher order harmonics. The main aim of hybrid APF therefore is to improve the filtering performance of high-order harmonics while providing a cost-effective low order harmonics mitigation. Passive filters which act as least impedance path to the tuned harmonic frequencies were used initially to reduce harmonics.

II. LITRATURE SURVEY

[1]*Gayadhar Panda, et.al*. This paper about performance analysis of single phase Shunt Active power filter (SAPF) verses Hybrid Active Power Filter (HAPF) using Simulink and Xilinx System Generator as a design platform. At the present age, removal of harmonics produced by the nonlinear loads to improve the power quality is a great issue. To overcome the problem due to harmonics, Active Power Filters (APFs) are used with various control schemes. But Hybrid Active power filter is a power electronic device which has both the characteristics of passive power filters and active power filters, helps in cancelation of the harmonics by producing compensating signal. The digital controller design and its simulation are presented for both the filter types, showing

acceptable THD results for the word length used in the fixed-point computations concerned in the switching sequence generation.There are many control scheme proposed for the control of Hybrid active power filter but the hysteresis current control format for the SAPF and HAPF can be used to generate the switching signals of the inverter with more advantages. (Hysteresis Current Controller) HCC provides easy implementation, fast current controllability and unconditioned stability in comparison to other methods. It creates an environment for fastest control with minimum hardware and has excellent dynamics. Traditional hysteresis current controllers produce bad harmonic performance, by varying the hysteresis band its performance can be improved to get a fixed switching frequency.[1]

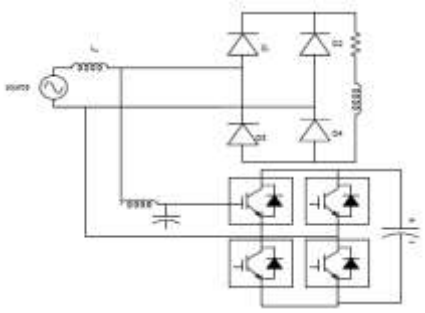

Fig. 1. Diagram of Shunt Active Power Filter.

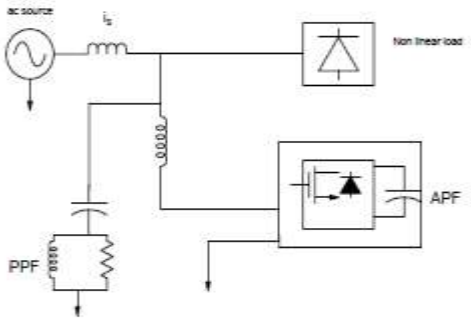

Fig. 2. Diagram of Hybrid Active Power Filter.

[2] ***Naimish Zaveri, et.al***. This paper suggests that different types of Synchronous Reference Frame methods for real time generation of compensating current for harmonic mitigation and reactive power compensation. All the techniques are analysed mathematically and simulation results are obtained which are being compared in terms of its compensation performance with different parameters under steady state condition. The three techniques analysed are the Synchronous Reference Frame Theory (SRF), SRF theory without synchronizing circuit like Phase Lock Loop (PLL) also called instantaneous current component theory and finally modified SRF theory. Simulation results are obtained under sinusoidal balanced voltage source balanced load condition. The comparison and effectiveness of all the methods is based on the theoretical analysis and simulation results obtained with MATLAB employing a three phase three wire shunt active filter test system.[2]

[3] ***Abdul Rahman, et.al.*** In this paper performance of Shunt Active Power Filter (SAPF) related to the number of power switch used in the circuit. The SAPF was used for harmonic compensation of single-phase ac/dc converter feeding a nonlinear load. The process involves an injection of equal but opposite current to mitigate the distortion current supplied back by non-linear load to the voltage supply. Thus, the injected current will shape the supply current to a sinusoidal form which is in phase with the supply voltage. Studies was performed to evaluate the SAPF topology performance with respect to the Total Harmonic Distortion (THD), odd harmonic components and power factor (PF) improvement. Theoretical and simulation results of SAPF performance are presented.[3]

[4] ***Marian P. Kazmierkowski, et.al.*** The aim of this paper is to present a review of recently used current control techniques for three-phase voltage source pulse width modulated converters. Various techniques, different in concept, have been described in two main groups: linear and nonlinear. The first includes proportional integral stationary and synchronous) and state feedback controllers, and predictive techniques with constant switching frequency. The second comprises bang-bang (hysteresis, delta modulation) controllers and analytical controllers with on-line optimization. New trends in the current control—neural networks and fuzzy-logic based controllers—are discussed, as well. Selected oscillogramsac company the presentation in order to illustrate properties of the described controller groups.[4]

[5]*Simone Buso, et.al.* This paper presents the comparative evaluation of the performance of three modern current control techniques for active filters. The linear rotating frame current controller, the fixed-frequency hysteresis controller, and the digital dead beat controller are considered. The main control innovations, determined by industrial applications, are presented, suitable criteria for the comparison are identified, and the differences in the performance of the three controllers in a typical parallel active filter setup are investigated by simulations.[5]

[6] ***Bhim Singh, et.al.*** Active filtering of electric power has now become amateur technology for harmonic and reactive power compensation in two-wire (single phase), three-wire (three phase without neutral), and four-wire (three phase with neutral) ac power networks with nonlinear loads. This paper presents a comprehensive view of active filter (AF) configurations, control strategies, selection of components, other related economic and technical considerations, and their selection for specific applications. It is aimed at providing a broad perspective on the status of AF technology to researchers and application engineers dealing with power

quality issues. A list of more than 200 research publications on the subject is also appended for a quick reference.[6]

III. Proposed Methodology

From this paper we study of various switching signal generation techniques for shunt active power filter (SAPF) with SRF as a Reference Current Generation techniques and we will Implementation of hysteresis current control technique for three-phase SAPF in SIMULINK environment or implementation of SPWM technique for Three-Phase SAPF in SIMULINK environment. Performance analysis of above mentioned switching signal generation techniques based on;%THD, complexity, speed of response, switching frequency, delay time. Performance shall be realized under the Dynamic load condition.

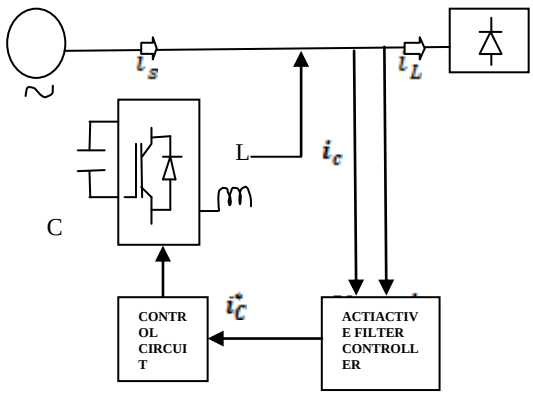

Fig. 3. Basic configuration of a SAPF

IV. Conclusion

The harmonic suppression and reactive power compensation is becoming a very important research hotspot in the field such as power electronics, electrical system, electrical automation and industrial electronics**.** The main power quality solution for harmonic pollution is by means of passive power filter and active power filter or hybrid active power filter. SAPF is voltage source inverter connected in parallel for reactive power compensation, harmonics compensation and power factor improvement. After simulating the nonlinear load without Shunt active power filter with shunt APF with hysteresis and sinusoidal pulse width modulation technique we will observed performance analysis on the basis %THD and it may be reduces as per IEEE Standard.

Acknowledgment

Author thanks for the support provided by, Department of Electrical Engineering, S. D. College of Engineering, Selukate Wardha (INDIA). This work is carried out as a part of Master of Technology project.

References

[1] Gayadhar Panda1, Santanu Kumar Dash2 & Nirjharini Sahoo3 "Comparative Performance Analysis of Shunt Active Power Filter and Hybrid Active Power Filter using FPGA-Based Hysteresis Current Controller" Financial support provided by Department of Science and Technology (DST) Government of India (IEEE) September 2012 ISBN-978-1-4673-0934-9/12H.

[2] Nimish Zaveri1, Ankit Mehta2 & Ajitsinh Chudasama3 "Performance Analysis of Various SRF Methods in Three Phase Shunt Active Filters" Fourth International Conference on Industrial and Information System (IEEE) 28 to 31December 2009 ShrilankaISBN-978-4244-1837. Page No.442.

[3] N.F.A. Abdul Rahman "An Analysis of Shunt Active Power Filter Performance using Multiple Number of Power Switches" International Conference of Electrical Machines and System (IEEE) October 2010 Chicago ISBN- 978-4733-1546 Page No.123J.

[4] Marian P. Kazmierkowski, and Luigi Malesani, "Current Control Techniques for Three-Phase Voltage-Source PWM Converters: A Survey," IEEE Transactions On Industrial Electronics, VOL. 45, NO. 5, OCTOBER 1998, pp 691-703.

[5] Simone Buso, Luigi Malesani, Paolo Mattavelli, "Comparison of Current Control Techniques for Active Filter Applications," IEEE Trans. on industrial electronics, vol. 45, no. 5. October 1998.

[6] Bhim Singh, Kamal Al-Haddad, and Ambrish Chandra, "A Review of Active Filters for Power Quality Improvement," IEEE Transactions On Industrial Electronics, Vol. 46, No. 5, October 1999, pp 960-971.