Smart Gadget for Women's Safety

[1]Akanksha Chandoskar,[2]Shraddha Chavan, [3]Yojana Mokal,[4]Payal Jha, [5]Pournima Kadam
[1,2,3,4,] Students at Department of Electronics
Shah andAnchor Kutchhi Polytechnic, Chembur.
[1]*Akankshachandoskar1198@gmail.com* [2]*Chavan.shraddha.91197@gmail.com*
[3]*yojanamokal@gmail.com* [4]*payaljha@gmail.com* [5]*Kadam080590@gmail.com*

Abstract: In today's world women's are less secure, they are facing more number of situations like kidnapping, rape case, & abuse. Because of this reasons women's can't step out of their house. The prime question in every Woman's mind, taking into account the ever rising increase of issues on women harassment in recent past, is only about her safety and security. The only thought haunting every Woman's is when they will be able to move freely on the streets even in odd hours without worrying about their security. When such incident happens with women's they will not feel insecure or helpless if they have some kind of device with them. With the help of these devices girls & women's can stay out without any fear at any time. This system can be used at places like bus stops, railway stations, footpaths, shopping malls, markets, etc. This project focuses on Women's Safety Gadget which is helpful for women's in. The system uses elements such as GPS, GSM, 8051 Microcontroller, Panic Button, Sensors.

Keywords: *GPS, GSM, Microcontroller, Safety, Zapper*

*****

I. INTRODUCTION

The status of women in India has gone through many great changes over the past few thousand years. From equal status with men in ancient times through the low points of the medieval period to the promotion of equal rights by many reformers, the history of women in India has been eventful. In modern India, women have adorned high offices in India including that of the President, Prime Minister, Leader of the Opposition and Speaker of the Lok Sabah. However, women in Indiacontinue to face social challenges and are often victims of abuse and violent crimes and, according to a global poll conducted by Thomson Reuters, India is the "fourth most dangerous country" in the world for women, and the worst country for women among the G20 [A group of developing industrial Nations established on 20th August 2003] countries. In India, every day more than 30 women were murdered and many are suffering austere mental and physical trauma [1].
This System focuses on a security system that is designed solely to serve the purpose of providing securityto women sothat they never feel helpless while facing such social challenges. The system consists of various modules such as GSMshield (SIM 900A), 8051 Microcontroller, GPS, screaming alarm, a set of pressure sensors for activation and power supply unit.

II. BLOCK DIAGRAM EXPLANATION

1.1 Power supply unit

This section needs two voltages viz., +12 V & +5 V, as working voltages. Hence specially designed power supply is constructed to get regulated power supplies.

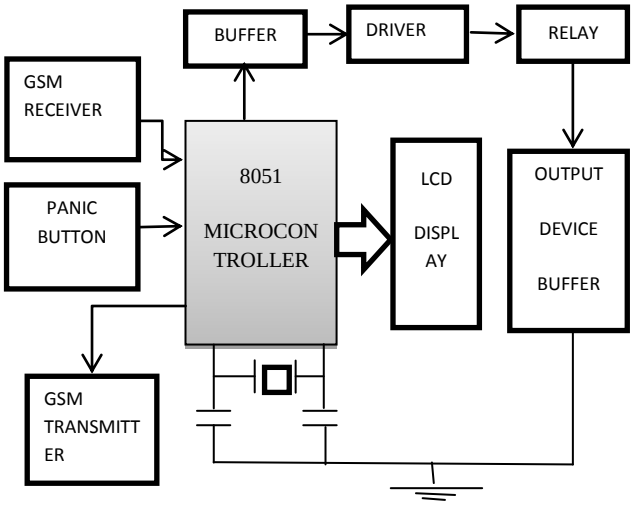

Figure 1.B.D. of Smart Gadget for Women's Safety

1.2 GPS module

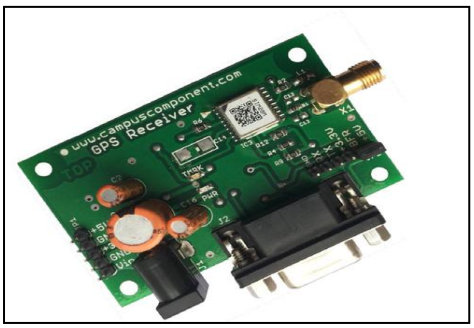

Figure 2.GPS Module

This is a GPS Receiver (5V Serial) with high gain having 4 Pin 2.54mm pitch strip. The third generation POT (Patch Antenna on Top) is used by the receiver for the GPS module[2]. It can be interfaced with normal 5V Microcontroller with the help of the in built 3V-5V converter.

The interfacing is made easier with the help of low pin count (4 pin) strip. The 4 Pins are 5V, TX, RX, and GND. This standalone 5V GPS Module does not require external components .It consists of internal RTC Back up battery and can be directly connected to USART of the 8051 Microcontroller. The current date, time, longitude, latitude, altitude, speed, and travel direction / heading among other data, are provided by the module and can be used in a many applications including navigation, fleet management, tracking systems, mapping and robotics [2]. The module can support up to 51 channels. The GPS solution enables small form factor devices which deliver major advancements in GPS performances, accuracy, integration, computing power and flexibility. Theyare used to simplify the embedded system integration process.

GPS consists of the following three segments.

1.2.1 Space segment (GPS satellites)

A number of GPS satellites are deployed on six orbits around the earth at the altitude of approximately 20,000 km (four GPS satellites per one orbit), and move around the earth at 12-hour-intervals.

1.2.2 Control segment (Ground control stations)

Ground control stations play roles of monitoring, controlling and maintaining satellite orbit to make sure that the deviation of the satellites from the orbit as well as GPS timing are within the tolerance level.

1.2.3 User segment (GPS receivers)

User segment (GPS receivers)

1.3 GSM

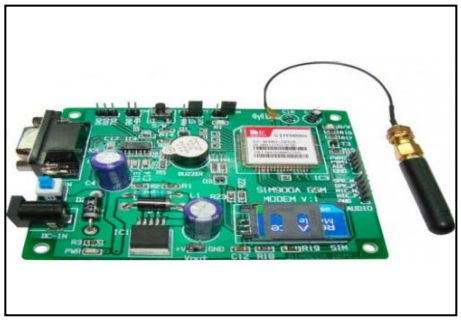

Figure 3.GSM Module

GSM Shield (SIM 900a): The SIM900 which is a complete Quad-band GSM/GPRS solution comes in a SMT modulewhich can be embedded in customer applications. Featuring an industry-standard interface, the SIM900 deliversGSM/GPRS 850/900/1800/1900MHz performance for Data, voice, SMS and Fax in a small form factor and with low power consumption. SIM900 can fit almost all the space requirements in the M2M application with dimensions of24mm x 24mm x 3 mm. SIM900 is designed with a very powerful single-chip processor integrating AMR926EJ-S core.Quad - band GSM/GPRS module with a size of 24mmx24mmx3mm, SMT type suit for customer application, An embedded Powerful TCP/IP protocol stack Based upon mature and field-proven platform, backed up by our support service, from definition to design and production [2].

1.3.1 Specifications of GSM

- ıwer supply: Single supply voltage 9V to 12V(DC).
- Onboard power ON and Network indication LED.
- Onboard provision to select the power on mode of SIM900A (manual or auto) using jumper.
- RS232 output to connect directly to computer.
- Serial TTL onboard pin to directly connected to microcontroller.
- Onboard Audio(speaker and microphone) interface pins.
- Onboard PWM and ADC channels.

2.3.2 Package Content

- *SIM900A Modem*
- *Antenna.*

1.4 Microcontroller

The **Atmel AT89 series** is an Intel 8051-compatible family of 8 bit microcontrollers (µCs) manufactured by the Atmel Corporation. Based on the Intel 8051 core, the AT89 series remains very popular as general purpose microcontrollers, due to their industry standard instruction set, and low unit cost. This allows a great amount of legacy code to be reused without modification in new applications. While considerably less powerful than the newer AT90 series of AVR RISC microcontrollers, new product development has continued with the AT89 series for the aforementioned advantages.

1.4.1 Features

- Compatible with MCS-51™ Products
- 8K Bytes of In-System Reprogrammable Flash Memory
- Endurance: 1,000 Write/Erase Cycles
- Fully Static Operation: 0 Hz to 24 MHz
- Three-level Program Memory Lock
- 256 x 8-Bit Internal RAM
- 32 Programmable I/O Lines
- Three 16-bit Timer/Counters
- Eight Interrupt Sources
- Programmable Serial Channel
- Low Power Idle and Power Down Modes

2.5 Buffers

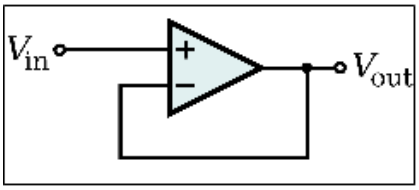

Figure 4. Buffer

Buffers do not affect the logical state of a digital signal (i.e. a logic 1 input results in a logic 1 output whereas logic 0 input results in a logic 0 output). Buffers are normally used to provide extra current drive at the output but can also be used to regularize the logic present at an interface.

2.6 Drivers

This section is used to drive the relay where the output is complement of input which is applied to the drive but current will be amplified.

2.7 Relays

It is an electromagnetic device which is used to drive the load connected across the relay and the o/p of relay can be connected to controller or load for further processing.

2.8 Indicator

This stage provides visual indication of which relay is actuated and deactivated, by glowing respective LED or Buzzer.

2.9 LCD Display

Figure 5.LCD Display

16×2 LCD module

16×2 LCD module is a very common type of LCD module that is used in 8051 based embedded projects. It consists of 16 rows and 2 columns of 5×7 or 5×8 LCD dot matrices. It is available in a 16 pin package with back light, contrast adjustment function and each dot matrix has 5×8 dot resolution.

Advantages

1. Women can go any where with more secure.
2. Avoids the women rape.
3. Cuprits can be easily found and can be punished
4. Consumes less power
5. Provides very accurate data via GPS system.
6. Allows the remote location of asset from anywhere there is cellular Service.
7. Facilitates simple asset recovery and tracking.

Disadvantages

The only thing that is clear about constitutional protections for location-based service information is the lack of clarity.

III. APPLICATIONS

1. It can be used safeguard the women in critical coditions.
2. It can be used to detect the vehicles under theft.
3. It can be employed for tracking any movable objects.
4. Fleet control.
5. Stolen vehicle searching.
6. Animal control.
7. Race control.
8. Espionage/surveillance.

Examples:

Figure 7.1 Purse

Figure 7.2 Wrist watch

Figure 7.3 Ornaments

The women wearing a watch or band when finds thatsomeone is going to harass, she presses a switch that is located on the watch or band [3].

IV. FUTURE

In this project we can further implement zapper (TheZapper, also known as The Gun or Beam Gun in Japanize an electronic light gun. This can be used for the defense purpose.) And pepper spray can be used.

Wearable technology, wearable's, fashionable technology, wearable devices, tech togs, or fashion electronics are clothing and accessories incorporating computer and advanced electronic technologies. The designs often incorporate practical functions and features.

Wearable devices such as activity trackers are a good example of the Internet of Things, since they are part of the network of physical objects or "things" embedded with electronics, software, sensors and connectivity to enable objects to exchange data with a manufacturer, operator and/or other connected devices, without requiring human intervention.

V. CONCLUSION

In today's world, many women employees are facing the problem of security which is taking place around the world especially across India. The proposed design will deal with critical issues faced by women in the near past and will help

to solve them with technologically sound equipment's and ideas. This system can overcome the fear that scares every woman in the country about her safety and security.

REFERENCE

[1] An Intelligent Security System for Violence against Women in Public Places,"Remy George, AnjalyCherian.V, Annet Antony, HarshaSebestian, Mishal Antony, Rosemary Babu.T ",International Journal of Engineering and Advanced Technology (IJEAT)ISSN: 2249 – 8958, Volume-3, Issue-4, April 2014

[2] SMART GIRLS SECURITY SYSTEM,"Prof. Basavaraj Chougula1, Archana Naik2, Monika Monu3, Priya Patil4 and Priyanka", Das5International Journal of Application or Innovation in Engineering & Management (IJAIEM) Volume 3, Issue 4, April 2014 ISSN 2319 - 4847

[3] Design of women safety system using RFID,"8051microcontroller and GSM based technology prototype", ShaikMazhar Hussain1, ShaikJhani Bhasha2

[4] www.Engineers Garage.com