ISSN: 2321-8169
262 - 265

Grid Synchronization using Voltage Control

Prof. Nitin P. Choudhary
Department of Electrical Engg
D.B.A.C.E.R. Nagpur,India
nitz87choudhary@gmail.com

Shubham Damahe
Department of Electrical Engg
D.B.A.C.E.R. Nagpur,India
sndamahe@gmail.com

Apurv Wankhede
Department of Electrical Engg
D.B.A.C.E.R. Nagpur, India
wankhedeapurv@gmail.com

Vivek kumar Musale
Department of Electrical Engg
D.B.A.C.E.R. Nagpur, India.
Vivek.musale47@gmail.com

Abstract— Micro-grid system is increasingly concerned for its superior performance. Monitoring system is an important part of it. Smart grid have flexible demand response pattern, adapt to multiple energy generation form, diversify and decentralized energy supply, intellectualize energy storage ways and coordinate operation between transmission and distribution grid and micro grid. Modern electric power system has increase usage of switching power converter. This tightly regulated switching power converter behave as a constant power load (CPLs).They exhibit a negative incremental impedance in small signal analysis. This negative impedance degrades the stability margin of interaction between CPLs and there feeders, which is known as negative impedance instability problem. The feeder can be an LC input filter or an upstream switching converter. This paper analyses input voltage fluctuations, power fluctuations due to change in load condition controlling and monitoring of power quality.

Keywords—*Stabilization, Monitoring, LC filters, Constant power load (CPLs).*

*****

I. INTRODUCTION

In the substation for controlling Voltage, manual tap changer is used, which require mechanical and physical action. Hence it increases a maintenance cost. Due to physical interaction manual errors results in a Sevier accident occurs. Irrespective of all this control things precise output does not achieve as per requirement (Power fluctuation due to change in load condition).To reduce all this physical, manual and mechanical interaction we used static interaction to control and maintain the power quality.

II. STABILIZATION

In order to stabilize the unstable system due to CPLs, several active stabilizing method have been proposed.However,these active method are based on different electric power system architecture and application. In order to clarify the difference between these methods and make it easier for engineer and researcher to find a suitable method for a given system with CPLs,this paper classifies the existing method into three categories according to different sources of stabilizing effect.Then,each method is analysed to show its advantage and disadvantages.

A. Active damping method 1: modifying the output impedance Zo(s) of the upstream converter.

In some electric power system configuration, the upstream circuit is a switching power converter. For example, in electric vehicle (EVs) onboard DC power system, the feeder of CPLs is another stage of converter. This upstream converter could be an intermediate bus converter or a source converter of a distributed generator. The upstream converter could be either a DC/DC converter or an AC/DC converter. In signal analysis point of view, if the converter work in continuous conduction mode (CCM) and is in open loop control, inductor and capacitor in this source converter serve as an LC filter. This LC filter can result in a peak value around its resonant frequency in the output impedance of the source converter. In addition, if the converter is in closed loop control and its bandwidth is lower than the resonant frequency, the LC filter resonant characteristic in the output impedance still exist beyond the bandwidth of the closed loop control.

B. Active damping method 2: modifying the input impedance Zin(s) of CPLs

In some DC power electric system, the feeder of CPL is an LC input filter. In addition, in AC power system, a diode type rectifier is equivalent to an LC filter.

C. Active damping method 3: adding a shunt impedance Za(s)

Owing to the sensitivity and availability problem in the active stabilization in section 3,a new type of method are proposed. In this type of method, an auxiliary DC/DC converter is added across the input voltage of the CPL.This DC/DC converter works as a power buffer and also can be designed to decouple the interaction between the CPL and its LC input filter.

III. MONITORING

Distributed generation and micro-grid system consist of renewable energy generation system (such as wind, solar, biomass and so on), clean energy generation system (fuel cells, micro gas turbine, and so on),cleanenergy generation system(fuel cells, micro gas turbine and so on),energy storage systems and a variety of loads. It is characterized by containing a variety of distributed energy. Each DG unit can operate in

ISSN: 2321-8169
262 - 265

grid-connected mode and island mode. In view of the above characteristics, micro-grid monitoring system must match the following main tasks and requirements:

(1) In order to monitor each generating unit simultaneously and improve the reliability and operational efficiency if micro-grid system, monitoring system should use distributed structure so that it can monitor the operating parameter compressively.

(2) It should support a variety of communication protocol so that it can communicate with distribution terminal device, includes receiving and handling parameter of analog or digital in different formats.

(3) The system configuration, subsystem configuration, the device configuration, the task configuration can ll be defined and modified online.

(4) The operation of the whole system, each subsystem and each device in system can all be monitored and remote controlled.

(5) The historical operation data of micro-grid system is the most significant data which can be used to make accurate prediction of system state and promote the operation and control of the micro-grid system.Therefore, the monitor system must be able to record and long-term storage the operating data of micro-grid system. In addition, the data can also be used for accident analysis, statistical analysis, calculation and future planning.

IV. LC FILTER

To remove the AC component or filter them out in a rectifier circuit, a filter circuit is used. A rectifier circuit is a device to remove the AC component of the rectified output, but allows the DC component to reach the load. A filter circuit is in general a combination of inductor(L) and capacitor(C) called LC filter circuit. A capacitor allows AC only and inductor allows DC only to pass. So a suitable L and C network can effectively filter out the AC component from rectified wave.

In inductor filter, the ripple factor is directly proportional to the load resistance. On the other hand in a capacitor filter, it is varying inversely with the load resistance. Hence if we combine the inductor filter with the capacitor the ripple factor will become almost independent of the load filter. It is also known as inductor input filter, choke input filter input or LC section.

V. CONSTANT POWER LOAD (CPLs)

There can be several types of load. One is a constant resistance load, another is a constant power load, and a third is a constant current load.

In constant power load, the dynamic resistance is adjusted to increase the current inversely to the load voltage. As the voltage rises or falls, then the product of voltage and current in the load is power which is constant. This is done to keep the power dissipated in the load constant as voltage drop. Electronics device with SMPS(Switched-Mode Power Supply) approximate this type of load as they generally employ regulator to generate a constant voltage and when then runs the electronics.

VI. CIRCUIT EXPLANATION

A. Circuit Diagram

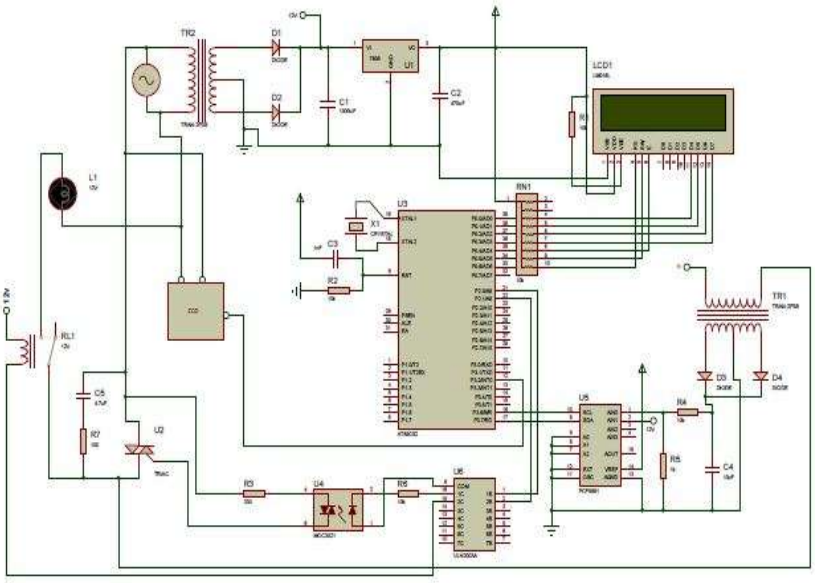

ISSN: 2321-8169
262 - 265

B. Components

(1)Step down Transformer: It is used to give input to the circuit. It is 220V/12V Transformer.

(2)Diode: It is PN junction diode used for AC to DC Rectification.

(3).Regulator: It is 7805 Regulator IC.It is used to convert 12V to 5V to operate all the equipment.

(4)Capacitor: There are two capacitor i.e. filter capacitor and storage capacitor. Storage capacitor is used to maintain 5V and filter capacitor is used to convert pure DC.

(5).Resistors: It is used to adjust 1.2V and also used to contrast of LCD.

(6)LCD: It is 16 characters, 2 line alpha numeric LCD. It is used to display the voltage level, errors and all parameters.

i.VSS -Ground for Logic. ii.VDD-Power supply for Logic.
iii.VEE - Contrast Pin. iv.RS - Register Selection.
v.RW-Read write selection. vi.E-Enable Signal.
vii.D0-D7- Data Bus Line.

may be used if needed for special purposes.

(7).Snubber Circuit: It provides isolation to High voltage and Low voltage.

(8).Pull Up Resistance: It is used to increase a driving capacity of micro-controller port.

(9).A to D Converter: It is 8 bit serial A to D converter used to monitor input and output voltage. It gives digital signal to microcontroller.

(10).Potential Transformer: It is also step down transformer i.e.220V/6V.It read the voltage of output and give the information to microcontroller.

*(11).Driver IC:*It is used to increase the voltage from 5V to 12V.

(12).Crystal Oscillator: For generation of continuous clock pulses.

(13).ZCD: It is NPN transistor and used for checking positive and negative half cycle.

(14).Micro-controller: It is 8051,8-bit microcontroller operate on 5V.It is used to simulate and compare the input and output voltage.

(15).Relay: It is used to ON and OFF the Load.

C. Working

(1)The 220V input is given to transformer. It is step down transformer so it converts 220V to 12V because all other component operates on 12V.

(2)Two diodes (D1&D2) are connecting to transformer for rectification from AC to DC.Filter capacitor is connecting for pure DC signal. Storage capacitor is connecting to maintain 5V.

(3)Regulator IC is used to convert 12V to 5V.Because LCD, microcontroller isoperating on 5V.

(4)There is a resistor connect at 3rd Pin i.e.VEE to adjust contrast ratio of LCD.LCD is used to display voltages, errors and all parameters.

(5)Potential Transformer is used to read the voltage of load and give data to microcontroller with the help of A/D converter. Potential Transformer is connecting with voltage divider (R4andR5) along with diode and capacitor to divide the voltage 6V to 3V.

(6)A/D converter is used to monitor the input and output voltage and output is given to microcontroller for simulation purpose.

(7)The microcontroller is connecting with A/D converter, pull up resistor, crystal oscillator and driver IC.

(8)Driver circuit is used to increase the voltage from 5V to 12 V to operate the TRIAC.The series resistance is connect with driver IC to limit the flow of current.

(9)Optcoupler is used to provide isolation to HV and LV. The coupling resistor (R3) is connect with optocoupler to reduce voltage level for TRIAC triggering.

(10)TRIAC is used to trigger the load.Snubber circuit (R7&C5) is used to protect from reverse e.m.f.

(11) Zero crossing detectors is connect to the 12th pin of microcontroller to check positive and negative half cycle.

(12)Crystal oscillator is connecting to 18th and 19th pin of microcontroller for generation of continuous clock pulses.

(13)Relay switch is operate on 12V and is used to ON and OFF the Load on under and over load condition. The circuit is operate on single phase supply so minimum input voltage is 180V and maximum is 280V.

D. Advantages

(1)Improve power quality.
(2)Require less space as compare to old.
(3)No mechanical part, so it reduces maintenance and capital cost.

E. Applications

(1)In grid, it is used to improve power quality and control the voltage.

(2)For domestic and commercial purposes ,it is used as voltage Stabilizer

ISSN: 2321-8169
262 - 265

F. Future scope

(1)Wireless monitoring and control can also be possible with WI-FI Network, GSM Network, WEB Technologies.

REFERENCES

[1] RenJingding,CheYanbo,ZhaoLihua,*"Discussion on monitoring Scheme of Distributed Generation and Micro-Grid syste"*.

[2] JuGe, ShashaLuo, Chen Chen*"Research On Ancillary Service Management Mechanisms In The Smart Grid"*

[3] Mngfei Wu, Dylan Dah-ChuanLu *"Active Stablization Method Of Electric Power System With Constant Power Loads: a review."*

[4] GLANZMANN*, G. ANDERSSON ETH ZURICH *"USING FACTS DEVICES TO RESOLVE CONGESTIONS IN TRANSMISSION GRIDS."*