Vibration Based Analysis of Rolling Element Bearing: State of the art

Mr. R. D. Borole[1], Prof. P. P. Kharche[2], Prof. M. P. Kharche[3]

[1]*Scientist "D", National Informatics Centre, Nagpur, borole.rd@nic.in*

[2]*Assistant Professor, Mechanical Engineering Department, SKNCOE Pune, ppkharche@sinhgad.edu*

[3]*Assistant Professor,Computer Engineering Department,KJCOEMR Pune,megha.kharche87@gmail.com*

ABSTRACT

The rolling element bearing is a vital part of the machine. Failure of rotating machines often linked to bearing faults. Condition monitoring and fault diagnostic of the rolling element bearing is important now a day. Due to constructional features of bearing, they generate vibrations. During the use, as the condition of bearing changes, nature of vibrations also changes. Bearing has a characteristic feature that makes them suitable for condition monitoring. This paper gives the state of the art of vibration based analysis of rolling element bearing, it covers basic of rolling element bearing, failure modes, condition monitoring techniques.

Keywords*: Condition Monitoring, Fault Diagnostic, Rolling Element Bearing.*

---

1. INTRODUCTION

The essential qualities of bearing for the health of a machine are robustness and reliability. Defects in bearings may arise during the manufacturing process. This paper is gives the state of the art of vibration based analysis of rolling element bearing. Most of the mechanical failure is caused by bearing fault. Severe bearing fault will persuade vibration, noise, low efficiency, even breakdown of equipment. According to practical running condition and fault diagnosis, maintenance is to establish a condition monitoring program to check the satisfactory operation of bearings [2][3].

Vibration, temperature, grindings, acoustic emission, oil film resistance are the techniques of monitoring and diagnosis of rolling element bearing. Using vibration diagnosis, such common bearing faults as crushing, crack, indentation, wear can be detected effectively [2][3].

2. ROLLING ELEMENT BEARING

The rolling element bearing is composed of different components: rolling elements, outer and inner rings. A deep groove ball bearing is shown in figure 1. Figure 2 shows components, applied force, load zone and load distribution. Compared to other rolling element bearings, ball bearings are smaller in sizes and having limited load carrying capacity. They can carry axial and radial loads. Correct alignment, placement where it is used, enough lubrication are the important points to take care of to maximize the life-span of this equipment [3][4].

A ball bearing consists of an inner race, an outer race, balls, a cage holding the balls apart from each other and a shaft. The load zone and load distribution are also given with the direction of applied force in the figure 2. In most cases, the outer race is held stationary where the inner race and the balls rotate. Defects are occurred mostly on the inner side of outer race of bearings such as cracks or pits. The rolling element bearing geometry is shown in figure 3.

Figure 1: Typical deep-groove ball bearing [3][4]

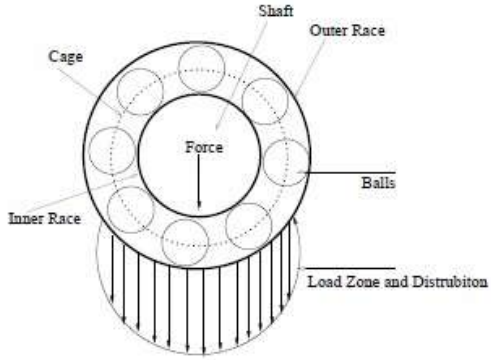

Figure 2: Ball bearing components, applied force, load zone and load distribution [3][4].

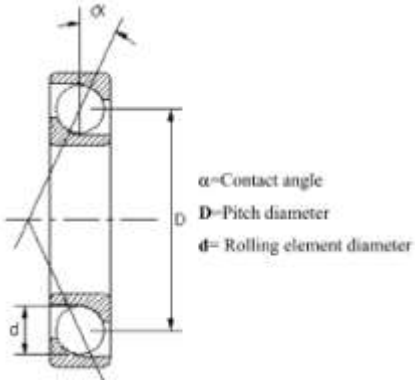

Figure 3: Rolling Element Bearing Geometry

The balls or rollers are the rolling elements in bearings. The balls in a ball bearing transfer the load over a very small surface on the raceways. The load-carrying capacity of a ball bearing is, therefore, lower than that of a roller bearing in which the rollers transfer the load via line contact with the raceways. The cage separates the rolling elements, preventing contact between them during operation. It also helps to prevent poor lubrication conditions and, in many cases, holds the bearing together during handling [5].

3. BEARING FAILURE MECHANISMS

There are a number of mechanisms that can lead to bearing failure, including mechanical damage, crack damage, wear damage, lubricant deficiency, and corrosion. When the smooth rolling contact surfaces are marred, higher stress conditions imposed on the surface reduce bearing life significantly. Permanent indentation created by rolling element overload is called brinelling. A crack in a bearing component may begin as a manufacturing-related defect or be induced by operating stress via overload or cyclic loading.

Deterioration processes speeds up when the bearing component temperature increases due to poor lubrication. In an environment of high humidity, where bearing operates may lead to surface oxidation and it produces rust particles and pits. The pits function as stress raisers, providing sites for crack initiation.

4. VIBRATION BASED ANALYSIS

Since the abnormal vibration of rotary machines is the first sensory effect of rotary component failure, vibration analysis is widely employed in the industry. When there is an interaction between a damaged area and a rolling surface occurs, vibration signal generated. For the diagnosis of faults, vibration analysis can be employed. Time domain technique, frequency domain technique and time-frequency technique are the condition monitoring techniques for vibration measurement [6] [7].

4.1 Time Domain Technique

Some of the time domain techniques can be used or applied for condition monitoring, such as root mean square (RMS), mean, peak value, Mean Square, crest factor, Skewness, kurtosis, Variance, Standard Deviation, Clearance Factor, Impulse Factor, Shape Factor [6][8].

Root Mean Square

Root mean square (RMS), measures the overall level of a discrete signal.

$$\mathrm{RMS} = \sqrt{\frac{1}{N}\sum_{n=1}^{N} f_n^2} \qquad \text{…….(1)}$$

Where N is the number of discrete points and represents the signal from each sampled point.

RMS is a powerful tool to estimate the average power in system vibrations. A substantial amount of research has employed RMS to successfully identify bearing defects using accelerometer and AE sensors [9].

Mean

The mean acceleration signal is the standard statistical mean value. Unlike RMS, the mean is reported only for rectified signals since for raw time signals, the mean remains close to zero. As the mean increases, the condition of the bearing appears to deteriorate [9].

$$\mathrm{Mean} = \frac{1}{N} \times \sum_{i=1}^{N} f_n \qquad \text{……(2)}$$

Peak value

Peak value is measured in the time domain or frequency domain. Peak value is the maximum acceleration in the signal amplitude.

$$P_v = \frac{1}{2}[\max(f_n) - \min(f_n)] \qquad \text{…….(3)}$$

Crest factor

Crest factor is the ratio of peak acceleration over RMS. This metric detects acceleration bursts even if signal RMS has not changed.

$$\text{Crest Factor} = \frac{P_v}{RMS} \qquad \text{…….(4)}$$

Skewness

Machined or ground surfaces in bearings show a random distribution of asperities that are commonly described with the normal distribution function. For this reason, various statistical moments can describe the shape of distribution curves therefore, assessing bearing surface damage level. Equation defines the third moment or skewness as [6]

$$\text{Skewness} = \frac{\frac{1}{N}\sum_{n=1}^{N}(f_n - \bar{f})^3}{RMS^3} \qquad \text{……..(5)}$$

Where f is the mean value. For normally distributed data sets the odd moments are zero, unless the time domain signal is rectified. Hence, skew can easily track for bearing conditions [6].

Kurtosis

The forth moment, normalized with respect to the forth power of standard deviation is quite useful in fault diagnosis. This quantity is called kurtosis which is compromise measure between the intensive lower moments and other sensitive higher moments.

$$\text{Kurtosis} = \frac{\frac{1}{N}\sum_{n=1}^{N}(f_n - \bar{f})^4}{RMS^4} \qquad (6)$$

Variance

$$\text{variance} = \sigma^2 = \frac{\sum_{n=1}^{N}(f_n - \mu)^2}{N} \qquad (7)$$

Standard Deviation

$$s = \left(\frac{1}{N-1}\sum_{n=1}^{N}(f_n - \bar{f})^2\right)^{\frac{1}{2}} \qquad (8)$$

Clearance Factor

$$Cl_f = \frac{P_v}{\left(\frac{1}{N}\sum_{n=1}^{N}|f_n|\right)^2} \qquad (9)$$

Impulse Factor

$$I_f = \frac{P_v}{\frac{1}{N}\sum_{n=1}^{N}|f_n|} \qquad (10)$$

Shape Factor

$$S_f = \frac{RMS}{\frac{1}{N}\sum_{n=1}^{N}|f_n|} \qquad (11)$$

4.2 Frequency Domain Technique

Another conventional approach is processing the vibration signals in the frequency domain. The signature of the defected bearing is spread across a wide frequency band and can be easily masked with low frequency machinery vibrations and noise [10]. There are five basic motions that can be used to describe dynamics of bearing movements. Each motion generates a unique frequency, the following five characteristics frequencies are depend on the rotational speed and the location of the defect in a bearing [11]:

Shaft rotational frequency

$$(FOR) = \frac{N}{60} \qquad (12)$$

Inner race defect frequency

$$(FID) = \left(\frac{n}{2}\right)\left(\frac{N}{60}\right)\left[1 + \left(\frac{b_d}{p_d}\right)\cos ø\right] \qquad (13)$$

Outer race defect frequency

$$FOD = \left(\frac{n}{2}\right)\left(\frac{N}{60}\right)\left[1 - \left(\frac{b_d}{p_d}\right)\cos ø\right] \qquad (14)$$

Ball defect frequency

$$FBD = \left(\frac{p_d}{b_d}\right)\left(\frac{N}{60}\right)\left[1 - \left(\frac{b_d}{p_d}\right)^2 (\cos Ø)^2\right] \qquad (15)$$

In this paper, we discussed about the vibrationa based analysis of rolling element bearing. We also covered rolling element bearing components and its geometry, bearing failure mechanisms, Vibration based analysis of rolling element bearing in time domain and frequency domain. Using these features in time domain and frequency domain we can diagnose the condition of rolling element bearing.

REFERENCES

[1] Janko Slavic, Aleksandar Brkovic, Miha Boltezar, "Typical Bearing-Fault Rating Using Force Measurements-Application to Real Data", Journal of Vibration and Control, December 2011 vol. 17 no. 14 2164-2174.
[2] Mao Kunli, Wu Yunxin, "Fault Diagnosis of Rolling Element Bearing Based on Vibration Frequency Analysis", IEEE Third International Conference on Measuring Technology and Mechatronics Automation (ICMTMA) 2011, 337.
[3] Prashant P. Kharche Dr. Sharad V. Kshirsagar, "Review of Fault Detection in Rolling Element Bearing", International Journal of Innovative Research in Advanced Engineering (IJIRAE), Volume 1 Issue 5, June 2014.
[4] Aziz Kubilay Ovacikli," Condition Monitoring of Ball Bearings Using Vibration Analysis", Master's Thesis, Department of Computer Science, Electrical and Space Engineering, Lulea University of Technology 2010.

[5] S. A. McInerny and Y. Dai, "Basic Vibration Signal Processing for Bearing Fault Detection", IEEE TRANSACTIONS ON EDUCATION, VOL. 46, NO. 1, FEBRUARY 2003

[6] Sorav Sharma, "Fault Identification in Roller Bearing using Vibration Signature Analysis", Master's Thesis, Department of Mechanical Engineering, Thapar University, Patiala, 2011.

[7] Shahab H. Ghafari, "A Fault Diagnosis System for Rotary Machinery Supported by Rolling Element Bearings", PhD Thesis, Department of Mechanical Engineering, University of Waterloo, Canada, 2007.

[8] M. Barakat, M. El Badaoui, F. Guillet, "Hard competitive growing neural network for the diagnosis of small bearing faults", Mechanical Systems and Signal Processing 37 (2013) 276–292.

[9] Abhinay V. Dube, L.S.Dhamande, P.G.Kulkarni, "Vibration Based Condition Assessment of Rolling element Bearings With Localized Defects", International Journal of Scientific & Technology Research Volume 2, Issue 4, April 2013.

[10] Zeki Kiral, Hira Karagulle, "Simulation and analysis of vibration signals generated by rolling element bearing with defects", Tribology International Volume 36, Issue 9, September 2003, Pages 667–678

[11] Jayaswal Pratesh, Wadhwani A. K., Mulchandani K.B. "Rolling Element Bearing Fault Detection via Vibration Signal Analysis". The Icfai University of Journal of Science & Technology, Vol. 4, No.2, 2008, pp. 7-20.