Title: Adaptive Cruise Control System of Automobile

Ms. Pooja D. Khatal[1], Ms. Sapana B. Kharat[2], Mrs. K.P.Agte[3]

[1]*T.E, Mechanical Engineering, Smt. Kashibai Navale College of engineering Pune,*
pooja19906@gmail.com
[2]*T.E, Mechanical Engineering, Smt. Kashibai Navale College of engineering Pune,*
swapnakharat19@gmail.com
[3]*Assistance Professor, Mechanical Engineering, Smt. Kashibai Navale College of engineering Pune,,*
meagte@sinhgad.edu

ABSTRACT

Control of automotive vehicles and engines is a relatively new field in automatic control. In this thesis the approach of using additional communicated information from either the second predecessor or the platoon leader is combined with the use of PLC as control method for Adaptive Cruise Control in Automobiles. The PLC-based CRUISE CONTROL controller at each time step minimizes the expected errors in position and velocity and the corresponding input variation. A radar system attached to the front of the vehicle is used to detect whether slower moving vehicles are in the ACC vehicle's path.This paper also describes Failure Modes and Effects Analysis (FMEA) and Fault Tree Analysis (FTA) based safety-critical approach towards to development of Adaptive Cruise Control system from a safety perspective. This approach using FMEA starts at early system design. An important feature of the newly based adaptive cruise control system is that, its ability to manage a competent inter-vehicle gap based on the speed of host vehicle and headway. There are three major inputs to the ACC system, that is, spe+ed of host vehicle read from Memory unit, headway time set by driver, and actual gap measured by the Radar scanner.

Key Words: Adaptive Cruise control, Stop and Go Manoeuvres, FMEA, FTA, Programmable Logic Controller.

---

1. INTRODUCTION

Today's superior automotive structures, alongwith with engines, transmissions, energetic suspension systems, and brakes, are controlled by microcomputers. Introducing automatic control into those systems, one has to cope with nonlinear plant characteristics, time varying parameters, and fast dynamics. Some variables necessary for the control scheme can't be measured at all. Thus, automotive structures are a primary new venture for manipulate engineers. Now-a-days, automatic control is used to enhance performance of automobiles presently in production. Precise manage of the air-to-gasoline (AIF) ratio is required to correctly make use of catalytic converters to limit exhaust emissions. There are two safety evaluation techniques most preferrably used within the safety analysis. One of the approach is failure mode and powerful evaluation (FMEA) . In FMEA, skilled engineers or machine designers group analyses the purpose result relationships of issue failures on system dangers. Second technique is Fault tree analysis, serves as an powerful method in reducing element stage checking out effort and additionally plan an effective integration and system testing. Firstly, the driver sets the preferred speed of the auto with the aid of turning on the cruise control mode at the desired velocity, such that the automobile travels on the set speed and hits the button. An change way to set the favored pace of the automobile is by way of tapping the set/acceleration button to growth the rate of the automobile or by means of tapping the coast button to decrease the rate of the automobile. Secondly, the processing unit within the system receives the input sign, and gives developed output signal to the actuator. Thirdly, the actuator adjusts the throttle function in line with the command of controller. Finally, the adjustments inside the throttle role ends in the exchange in the velocity of the car travelling and obtains the desired pace. The real pace of the car is continuously monitored with the aid of a sensor and fed to the processor. The manner of transmitting the cutting-edge pace of the car maintains to the processor to keeping the preferred pace, so long as the cruise manage is engaged.

2. ADVANCED CONTROL

Advanced modem control can enhance performance and provide extra systematic tactics, including

- PLANT MODELING
- ADAPTIVE AND ROBUST CONTROL
- CRUISE CONTROL

3. PLANT MODELING

It is widely recognized that, prior to controller layout; the dynamic behavior of the respective manner ought to be analyzed. This requires derivation of a model that describes procedure to enough accuracy. In automotive structures, the modeling activity turns out to be some distance more tough and time-ingesting than the design of the controller itself. Some models presently in use most effective cope with static plant conduct; as an instance, so-called engine maps were delivered to optimize A/F ratio and ignition perspective in each running point of the engine. The ignition angle is saved for all combinations of engine speed and primary gasoline-injection timing. After having determined its present operating factor, the ignition controller reads out the optimum ignition angle from the map. Boning and coworkers and Tennant and coworkers evolved a automated process to get the most suitable values, that's based at the method of Lagrangian multipliers. By this, the engine's gas intake is minimized even as concerning given constraints for pollutants.

4. ADAPTIVE AND ROBUST CONTROL

Assuming the existence of a model with sufficiently accurate parameters, adaptive control schemes may be implemented. Robust method is every other manner to alter plants with most effective moderate parameter versions, if a controller with steady parameters is suitable. I even have investigated an adaptive cruise manage for vehicles, which relieves the driver from regulation at a given velocity. For different engine sorts, transmission gears, and loading conditions, plant parameters vary substantially.

Characteristics of engine output torque and air drag are nonlinear. Conventional proportional-indispensable manage plays rather poorly in this situation. A version for cruise manage.

5. CRUISE CONTROL

Cruise control (now and again called speed control in a few nations) is a device that robotically controls the rate of a motor automobile. Previously it became performed by way of the governor who adjusts the throttle function as the speed of the engine changes with extraordinary loads. Following the 1973 oil disaster and rising fuel prices, the device became extra popular in the U.S. "Cruise manage can shop gasoline with the aid of keeping off surges that expel gasoline" at the same time as driving driver sets desired speed and the system takes over the throttle of the car to preserve the speed.

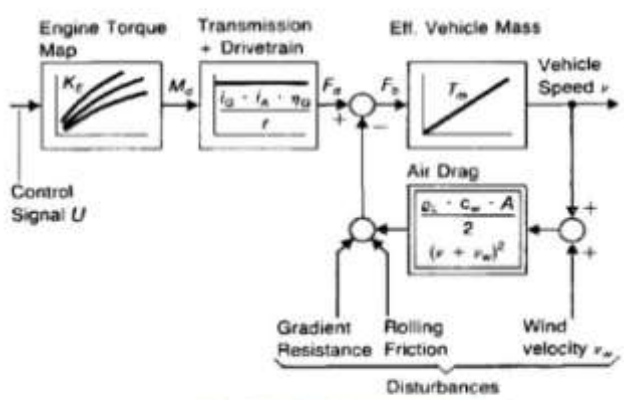

Fig. Cruise Control Method

6. PROGRAMMABLE LOGIC CONTROLLER (PLC)

A programmable logic controller (PLC) or programmable controller is a digital computer used or automation of electromechanical procedures, consisting of control of machinery on manufacturing unit meeting lines, leisure rides, or lighting fixtures. PLCs are used in lots of industries and machines. Unlike general-cause computer systems, output arrangements, extended temperature levels, immunity to electrical noise, and resistance to vibration and effect. Programs to control gadget operation are typically stored in battery-subsidized or non-risky memory. The functionality of the PLC has advanced over time to encompass sequential relay control, motion control, system control, distributed manage systems and networking. The data handling, processing energy and conversation abilties of a few modern-day PLCs are approximately equivalent to laptop computers.

7. COMPONENTS OF PLC

- Power supply
- CPU
- Digital Input Module
- Digital Output Module
- Analog Input Module
- Analog Output Module\
- Function Module
- Communication processor

8. RESULTS FROM SIMULATING DIFFERENT SCENARIOS

To be able to compare the CRUISE CONTROL controllers that have been designed, they're implemented in a platoon of cars that undergoes visitors eventualities, each of which consists of numerous next subscenarios. The first situation, in an effort to be known as scenario 1, is the state of affairs used for tuning of the PLC-primarily based controllers (again with five motors). The 2nd situation (the validation situation, state of affairs 2) is constructed up from comparable sorts of subscenarios, however with exclusive values for pace and acceleration.

It is predicted that PLC-based totally CRUISE CONTROL also can be secure for larger platoons due to the fact safety is extra critical than comfort.

9. FMEA (Failure Mode Effect Analysis)

Failure modes and Effect Analysis (FMEA) is a little by little method for figuring out all feasible screw ups in a layout, a production or assembly technique, or a productor provider. Failures are prioritized according to how extreme their effects are, how regularly they occur and the way effortlessly they can be detected. The motive of the FMEA is to take movements to remove or lessen hazards, beginning with the very best priority ones. FMEA consists of 3 primary phases. In the first phase of identification, one desires to determine what can cross wrong. In the second one phase of analysis, one is needed to discover the probability of failure, its effects and in keeping with this calculate the chance priority range. In the third phase, one have to assume out the way to do away with the occurrence or lessen the severity of undesired consequences. FMEA begins during the earliest conceptual stages of design and keeps all through the existence of the product or service.

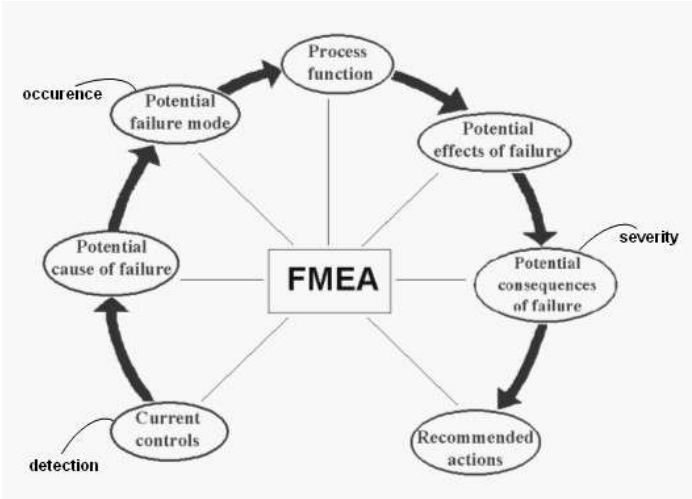

Fig. Main phases of FMEA

10. FAILURE MODE AND EFFECT ANALYSIS (FMEA) OF ADAPTIVE CRUISE CONTROL FMEA

Is a bottom up approach used to discover, prioritize, and remove potential disasters from the system, layout or system. The screw ups of Adaptive Cruise Control (ACC) the use of FMEA approach are listed in table.

TABLE I: FMEA of Adaptive Cruise Control (ACC)

ACC Part	Failure Mode	Effects	Cause
Radar	Electrical components failure	sensor output equal to the maximum or minimum of that sensor	Due to hardware failure
	Induced Noise	random variations superimposed on the desired echo signal received in the radar receiver	Reflected signals decline rapidly as distance increases. so noise induces a radar limitation
	Clutter Effect	serious performance issues with radar systems	caused by a long radar waveguide between the radar transceiver and the antenna
Speed Sensor	Power supply to sensor system fails.	No measurement of input signal	Wire defect.
	Crucial electronic components	Incorrect output (e.g. integration might be incorrect).	Due to hardware failure
Brake Sensor	Braking Signal	may result into Accidents.	Delaying (late/Early braking Signals

11. FTA (Fault Tree Analysis)

Fault Tree Analysis (FTA) is a popular and efficient danger identification device. It offers a standardized subject to evaluate and manipulate dangers. The FTA system is used to solve a wide form of issues starting from safety management issues. This device is utilized by the professional safety and reliability community to both prevent and resolve dangers and hazards. Both qualitative and quantitative strategies are used to identify areas in a system that is maximum important to secure operation.

The procedural steps of performing a FTA are:

1.Assume a system state and pick out and really report the pinnacle level undesired occasion(s). 2. Develop the higher levels of the trees through a top down procedure. That is figuring out the intermediate failures and mixtures of hazards or events that are the minimal to cause the following higher degree event to arise. The logical relationships are graphically generated as described under using standardized FTA logic symbols. 3. Continue the top down system until the root reasons for each department is recognized and/or till further decomposition isn't requisite. 4. Assign chances of failure to the lowest level occasion in every branch of the tree.This may be thru predictions, allocations, or historical statistics. 5. Establish a Boolean equation for the tree the usage of Boolean logic and evaluate the chance of the undesired top stage event.6. Compare to the gadget stage requirement. If the requirement isn't met, enforce corrective action.Corrective actions range from redecorate to evaluation refinement.

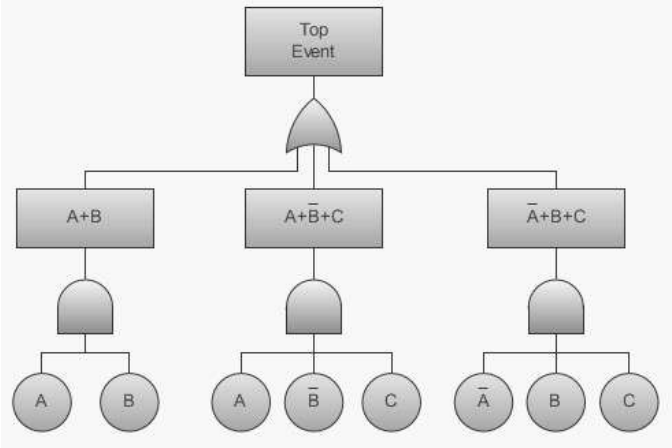

Fig. Example of FTA

12. STOP & GO MANOEUVRES

Commercial structures able to preventing the vehicle when a collision is forthcoming at speeds below15 km/h were developed through vehicle producers, but their dependence at the human driver to restart the automobile might cause site visitors jams.

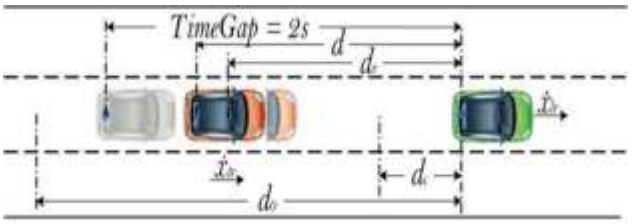

Fig. Stop and Go Scheme

Thus, self sufficient clever riding in visitors jam situations is one of the most hard topics of large metropolis visitors control. These types of device are regarded within the literature as prevent-and-cross systems They cope with the vehicle in urban eventualities with common and from time to time difficult braking and acceleration. The main concept of those manage structures is to adjust the vehicle across the well-known 2-s headway rule, which tries to hold a distance proportional to the human response time.

13. SIMULINK MODEL AND RESULTS

A trial ACC model in a merge-in situation is built on Simulink as proven in Fig underneath The PID controller is being employed for the automobile in cruise control version in the simulation. The actual distance is being measured and it's modelled with a signal builder on Simulink, as proven .

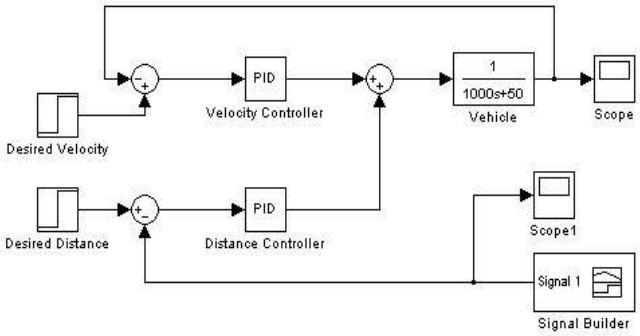

Fig. A Trial ACC Simulation Model

Here the interaction is supplied with a negative feedback, such that it subtraction manner obtains between the preferred distance and real distance. Distance variation to the model is generated the usage of Signal Builder block in Simulink and generated.

14. CONCLUSION

1. PLC-based totally CRUISE CONTROL is more secure than different CRUISE CONTROL, and consequently desired as a manipulate method for CRUISE CONTROL. Furthermore, with appreciate to designing CRUISE CONTROL controllers, based totally on the case have a look at the following end may be formulated.

2. It isn't easy to layout a CRUISE CONTROL controller that obtains smooth throttle/ brake trajectories with PLC. With PLC this seems simpler to obtain, but on the price of a slower platoons. Because safety is more critical than comfort.

3. With PLC-based CRUISE CONTROL it is favored to get hold of through communication, similarly to the present day states of the direct predecessor, at least the current states of the second predecessor and/or the anticipated destiny states from the direct predecessor, a good way to gain higher string balance.

4. The possible disasters in Adaptive Cruise Control (ACC) system the usage of FMEA and FTA in the failure analysis of protection-essential machine. We have diagnosed the failures that typically arise inside the working of the Adaptive Cruise Control (ACC) device. The screw ups parts in the ACC system are radar failures, velocity sensor failures and brake sensor screw ups. The results and causes of these ACC elements are diagnosed by way of the use of Failure Mode Effective Analysis (FMEA) and root causes of these failures are analyzed by means of the use of Fault Tree Analysis (FTA). The combined results of FMEA and FTA offer input for evaluation of temporal or causal justification for prioritization of verification or validation check systematic method from gadget right down to subsystem.

5. Stop-and-go manoeuvres represent one of the most important and as yet unsolved topics in the automotive sector. Yet this paper proposed ACC for prevent and cross manoeuvres of an wise Vehicle the use of hybrid PID controller. The Proposed method offers distance and pace monitoring in addition to presenting the smooth variant of the vehicle acceleration.

15. REFERENCES

[1] Sunay Mishra, L. Priyadarshini, S. Mishra, "*Cruise Control of Automobiles"*,International Journal of Recent Technology and Engineering (IJRTE) ISSN: 2277-3878, Volume-3, Issue-1, March 2014.

[2] M. Ben Swarup, M. Shriniwasrao, "*Safety Analysis of Cruise Control System Using FMEA and FTA",* International Journal of Advanced Research inComputer Science and Software Engg. Volume-4, June 2014.

[3] V.V. Shivaji, M. Shailaja, " *Adaptive Cruise Control Systems for Vehicle Modelling Using Stop and Go Manoeuvres",* International Journal of Engineering Research and Applications (IJERA) Vol. 3, Jul-Aug 2013.