Tool Design and Manufacturing of Disc Modulated Bracket for Jaguar Program L-155

Ananya Bhalerao1, Anjali Bodake2, Adwait Umbarkar3, Nipunkumar Patel4
1Student, Mechanical Engineering, SKNCOE, ananya_bhalerao@yahoo.co.in
2 Student, Mechanical Engineering, SKNCOE, bodakeanjali07@gmail.com
3 Student, Mechanical Engineering SKNCOE, audyq7@gmail.com
4 Student, Mechanical Engineering, SKNCOE, patelnipun.n@rediffmail.com

ABSTRACT

In 21st century, die manufacturing has enormous importance in our life. Right from very tiny components such as washers to the very large and huge parts such as aeroplane shells are manufactured by dies. In this paper, basically we have designed, manufactured. We also have considered calculative and economical aspects of sheet metal working.

While manufacturing, product has to undergo many processes. While designing the specific product according to the order, the company has to go for die design. By considering the component, die and punch are designed in every step such as, drawing, piercing, trimming etc.

Keywords*: Die design process.*

---

1. INTRODUCTION

The design and manufacture of press tools, or punches and dies, is a branch of production technology that has extended into many lines of engineering manufacture over the past seventy years. Due to its high production rateindustries generally use press machines. Thickness can vary significantly, although extremely small thicknesses are considered as sheet and above 6mm are considered as plate. Thickness of the sheet metal fed in between is called its gauge. Sheet metal is simply fed in between the dies of press tool for any press operation to perform. The reciprocating movement of punch is caused due to the ram movement of press machine. The press machine may be of electrical type, mechanical type, pneumatic type, manual type and hydraulic type. In today's practical and cost conscious world, sheet metal parts have already replaced many expensive cast, forged and machined products.

2. PROCEDURE FOR DIE MAKING

The procedure for Punch and Die are as follows:
• Design for Dashboard is provided by the customer.
• The process sequence is decided by the given model.
• Utilization for the blank is calculated.
• A process sheet is prepared .
• Die and Punch is designed for each operation.
• 3D data is converted into 2D.
• Design is provided to manufacturing department.
• Die and punch is manufactured.
• Inspection of dies and punch.
• Die and punch is given to customer.

2.1 Process for operation

The following operations were carried on the component:
• Drawing
• Flanging
• Piercing
• Trimming
• Part-Off

2.2 Strip Layout

An important consideration in strip layout is distance between nearest point of the blanks and between blanks and edges of the strip. To prevent the twisting and wedging between punch and die material thickness must be increased. A general thumb rule is to keep distance equal to 1-1.5 times material thickness.

ISSN: 2321-8169
1537 – 1541

Layout A

Layout A:
For strip layout A,
Dimension of each blank(mm) = 210 X 150 X 2
No. of strips =11
No. of components in one strip =8
Total components per sheet =88
Area of Blank(mm^2) = 2500 X 1250 =31500
% utilization of material = [(31500 x 88)/ (2500 x 1250)] X 100
= 88.70%

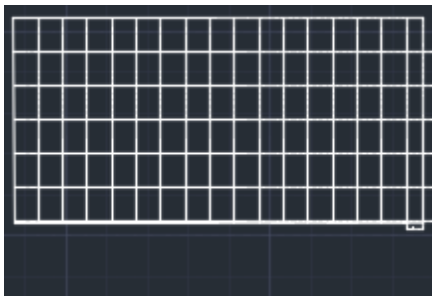

Layout B

Layout B:
For strip layout B,
Dimension of each blank(mm) = 150 X 210 X 2
No. of strips = 16
No. of components in one strip = 6
Total components per sheet = 96
Area of Blank(mm^2) = 2500 X 1250 =31500
% utilization of material = [(31500 x 96)/(2500 x 1250)] X 100
= 96.77%

2.3 Method Plan

The method plan for the operation processes are as follows:

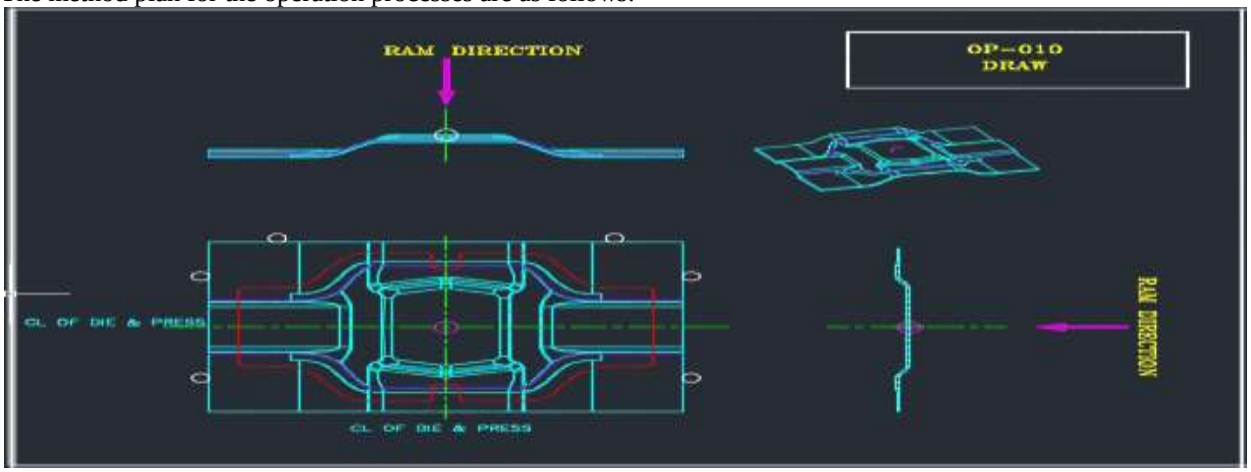

ISSN: 2321-8169
1537 – 1541

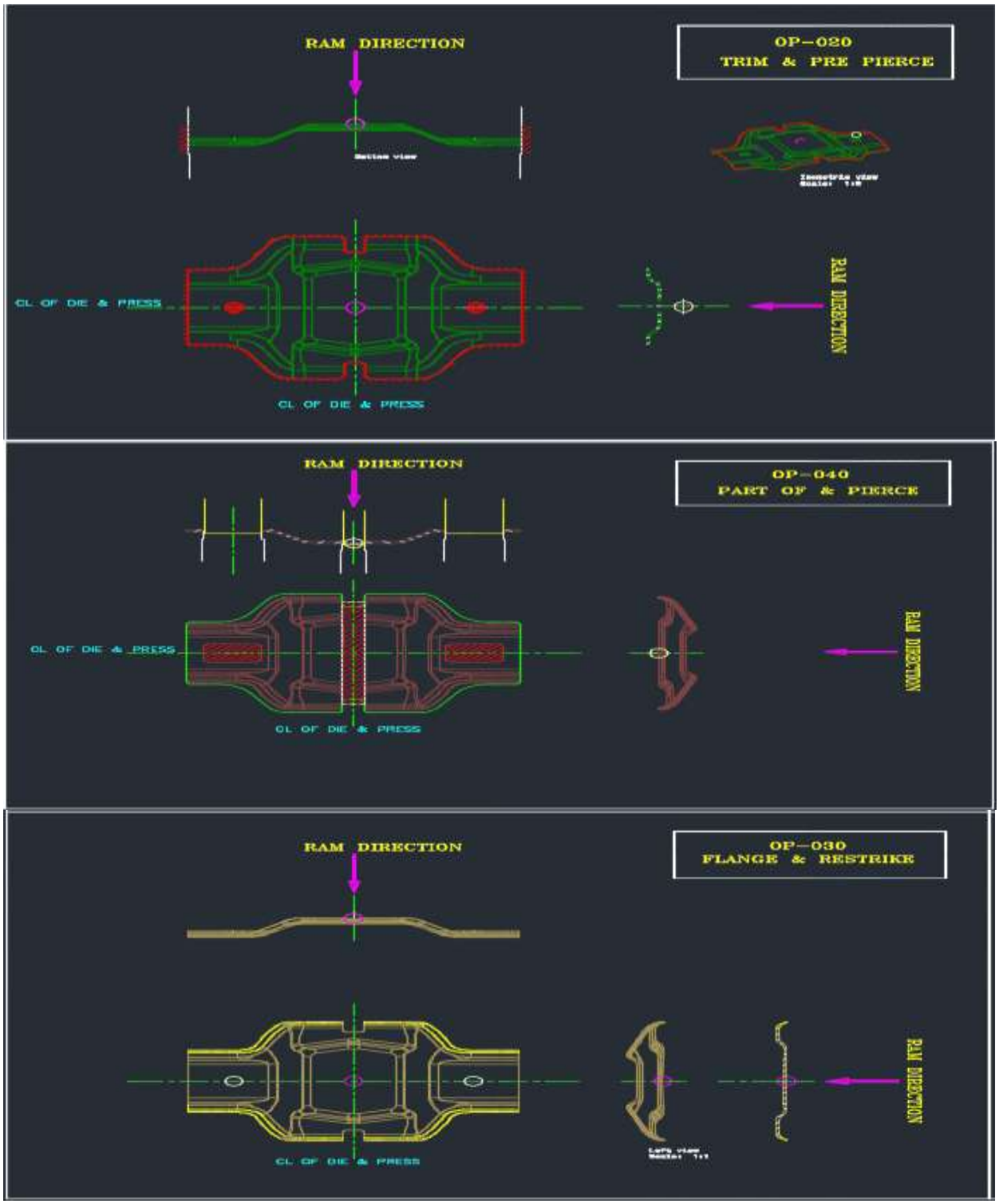

2.4 CALCULATIONS

2.4.1 Drawing Die

Drawing is the first operation which is performed on the blanked component.

Force Calculations:

Diameter of Punch(D) = 250 mm

Shell Height(h) = 14.459 mm

Diameter of Blank(d) = 198mm
Constant(c) = 0.6
thickness(t) = 2mm
Shear strength(s) = 40 kg/mm^2
Force = Π x d x t x s{(D/d)-c}
= Π x 198 x 2 x 40 {(250/198)-0.6}
= 32.974 x 10^3 kg
= 32.974 tons

2.4.2 Trim and Pre-Piercing Die

I) Trim
Force Calculations:
Perimeter of the trim portion(p) = 532.59mm
Shear strength(s) = 40 kg/mm^2
thickness(t) = 2mm
Force = (t x p x s)/10^3
= (2 x 532.59 x 40)/10^3
= 42607.2 kg
= 42.6072 tons
II) Pre-Piercing
Force Calculations:
Perimeter of the pre-pierced portion(p) = 163.36mm
Shear strength(s) = 40 kg/mm^2
thickness(t) = 2mm
Force for one pre-pierced portion = (t x p x s)/10^3
= (2 x 163.36 x 40)/10^3
= 13068.8 kg
= 13.07 tons
Force for all four pre-pierced portion = number of pierced holes * Force for one piercing operation
= 4*13.07
= 52.28 tons
III) Total Force
Total Force = 42.6072+ 52.28
= 94.8872 tons

2.4.3 Part-Off and Pierce

I) Part-Off
Force Calculations:
Perimeter of the pierced portion(p) = 290.632mm
Shear strength(s) = 40 kg/mm^2
thickness(t) = 2mm
Force = (t x p x s)/10^3
= (2x290.632x40)/10^3
= 23250.56 kg
= 23.25 tons
II) Pierce
Force Calculations:
Perimeter of the pierced portion(p) = 152.757mm
Shear strength(s) = 40 kg/mm^2
thickness(t) = 2mm
Force for one piercing operation= (t x p x s)/10^3
= (2x152.757x40)/10^3
= 12220.56kg
= 12.22 tons
Total force for piercing = number of pierced holes * Force for one piercing operation
= 2*12.22

= 24.44 tons
III) Total Force
Total Force = 23.25+24.44
= 47.69 tons

2.5 Materials
Drawing IND D2(punch steel and die steel)
Trimming Mild Steel
Flanging and pre-piercing IND D2
Pierce and part-off Mild Steel

2.6 Dashboard View

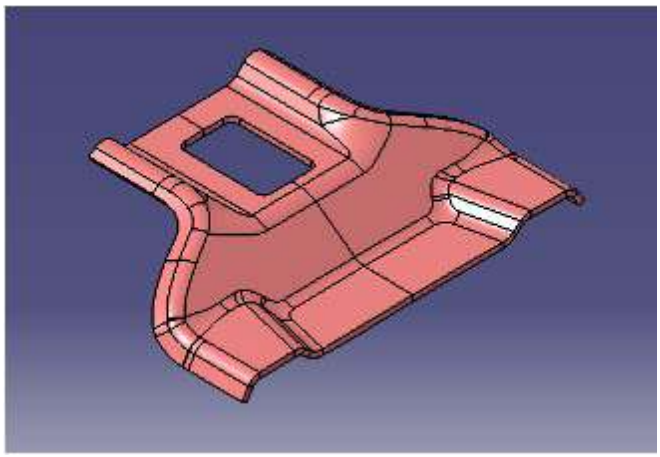

3. CONCLUSION
The available press tools of 100 tons are suitable for each operation necessary while manufacturing. It is also found that, materials chosen are suitable for all operations. Calculative and economical assumptions are also optimistic.