TITLE: Home Automation and Security with Alerting System for Gas Leakage and Smoke Detection

Abhishek Ajay Karanjikar[1], Saurabh Sanjay Kulkarni[2], Pranav Prasad Kulkarni[3], Shreyash Dipak Kapadnis[4]

[1]*Student, Mechanical Department, SKNCOE, abhishekakaranji@gmail.com*
[2]*Student, Mechanical Department, SKNCOE123saurabhk@gmail.com*
[3]*Student, Mechanical Department, SKNCOEkulkarnipranav333@gmail.com*
[4]*Student, Mechanical Department, SKNCOEshreyashdkapadnis@gmail.com*

ABSTRACT

There has been a gradual evolution from traditional to automated products and systems in various ways and has primarily linked with increasing levels of control. With the introduction of microprocessors, there has been focus on executing it in designing intelligent systems in the manufacturing sector as well as domestic products and systems. Traditional manual systems lack the control and precision provided by automated systems. In case of home automation, automation provides more control, economy and reduced manual involvement with more focus on wireless control. Automated power control systems can decrease power wastage occurring due to human negligence. Intelligent systems can be made to manage electric and water supply to a building. All home systems can be designed to be controlled using a wireless device providing the user more control and comfort.
Following thesis attempts to explain the design of Home Automation system, including alerting systems for fire, gas leakage and suspicious movements. It includes Occupancy based lighting control, Outdoor lighting control based on amount of ambient lighting and Tank water level control. These systems use Beckhoff PLC with control logic written using TwinCAT3 software. The design process includes selection of sensors, PLC I/O terminals, location for sensor mounting and design of control logic. Finally the system will be controlled via any device connected to the Home Wi-Fi network.
Keywords*: Home automation, TwinCAT3, BekhoffPLC,Occupancy based lighting, Alerting system..*

---

1. INTRODUCTION

Home Automation is an extension of Building Automation and involves the control and automation of lighting, heating, ventilation, air conditioning, appliances, and security. The system consists of a set of sensors, switches, and response devices that are used to control various room parameters like lighting, ventilation, temperature, humidity, etc. to facilitate user comfort. Intelligent and semi-intelligent devices like washing machines and modern household refrigerators also are part of home automation. Security systems for theft/ break-in, fire and gas leakage hazards are also a part of home automation modules. Various integrated modules work in conjunction to maintain user comfort, home economy as well as security.

1.1 Problem Statement

Conventional systems used in modern homes lack adaptability and control of Automated systems. These systems are manual and may cause problems due to human errors and negligence. It is therefore important to have a system that can manage various resources and control environmental parameters to provide comfort to the user. Automated systems are reliable and reduce manual involvement. In event of a Gas leakage or Fire, conventional systems lack alerting mechanisms and rely on manual methods for control. Hence it is essential to setup an alerting system to deal with fire and other security hazards. The project aims at creating control system solutions for some real-time Home Automation applications using known programming platforms (TwinCAT3) with a PLC-based system.

1.2Objectives

Conventional systems used in modern homes lack adaptability and control of Automated systems. These systems are manual and may cause problems due to human errors and negligence. It is therefore important to have a system that can manage various resources and control environmental parameters to provide comfort to the user. Automated systems are reliable and reduce manual involvement. In event of a Gas leakage or Fire, conventional systems lack alerting mechanisms and rely on manual methods for control. Hence it is essential to setup an alerting system to deal with fire and other security hazards. The project aims at creating control system solutions for some real-time Home Automation applications using known programming platforms (TwinCAT3) with a PLC-based system.

1.3 Scope

System design, sensor calibration & selection, programming, simulation and testing for following applications will be done;
1. Room lighting control based on Occupancy
2. Tank water level control
3. Outdoor Lighting control based on amount of ambient lighting
4. Smoke detection & Fire Alarm
5. Gas Leakage Sensing (LPG / Butane gas sensing)
6. Suspicious Movement detection

1.4 Project Approach

Following step-wise approach is to be followed in the course of this project:
1. Identification of System Control Parameters and Triggers.
2. Selection of sensors, switches, actuators and response devices.
3. Design of Control Logic.
4. Implementation of Logic into PLC program.
5. On-PC simulation of the system.
6. Actual implementation and calibration of system

2. Literature Review

Home security system could be appropriate for application for small buildings with reasonable latency, low bandwidth–limited requirements with low budget provisions. Building Automation Systems could be employed for application for large buildings with inflexible latency, huge bandwidth–large requirements with high budget provisions. This work has proved that with limited budgetary provisions, model solutions for home security and complete building automation could be developed based on wired networking technology, with adequate local/remote access as well as control features and with proven ability to monitor and control with aspects including intelligent data reporting, security and user-friendly operation. Solutions presented here in form of Home Security System and Building Automation System have been presented and based on wired network. Upcoming buildings can be made equipped with systems presented. However, as re-wiring of existing buildings may be inconvenient and costly, and hence in such cases power line based communication systems or wireless technologies can be employed; even, hybrid-network protocols at the device level can be the used. This paper has been referredfor understanding how existing buildings can be automated by minimum need for rewiring and reconstruction.[1]
"Building automation systems: Concepts and technology review" by Pedro Domingues et alexplains basic Building Automation Concepts like Sensors & Actuators used, device models and current technologies in use. This article explains fundamental concepts and requirements of Building Automation systems, defining each feature based upon established literature standards. Using these aspects as guidelines, the main Building Automation technology specifications available are then reviewed with respect to their coverage of features.[2]
The IEC (International Electrotechnical Commission) is a worldwide organization for standardization comprising all national electrotechnical committees (IEC National Committees). The objective of the IEC is to promote international co-operation on all questions concerning standardization in the electrical and electronic fields. The IEC 61131 is an international standard for programmable controllers. It is divided into several parts. The Part-3 of IEC 61131 specifies syntax and semantics of programming languages for programmable controllers as defined in Part-1

of IEC 61131. The functions of program entry, testing, monitoring, operating system, etc., are specified in Part-1 of IEC 61131. All platforms used in PLCs are based on the aforementioned standard. Hence, at least a basic understanding of the standard is necessary before dealing with specific platforms in PLC programming.[3]

The book, "IEC 61131-3 Programming Industrial Automation Systems, By Karl-Heinz John & Michael Tiegelkamp, Springer", gives extensive information about PLC programming. It includes detailed explanations on each of the five languages under the IEC 61131 standard. The book reviews the need for a uniform, platform independent and high-level programming language, since, the classical PLC programming methods, such as the instruction list, ladder logic or control system function chart, which have been employed until now, have reached their limits. The authors also give information on configuring of hardware for PLC systems. Syntaxes, programming structures and methods used in the project will be extensively drawn from this text.[4]

Beckhoff Information System is a constantly growing reference source for Beckhoff Products. It consists of specifications of all the PLC hardware, I/O modules, connection buses, etc. used on Beckhoff platforms and details on the TwinCAT automation platform. We will be using the Beckhoff's TwinCAT3 platform for programming and simulation purposes. Most of our knowledge on using the TwinCAT platform is based on this information system. Following information pertaining to the dissertation has been referred from the information system:

1. Types of Modular PLCs
2. I/O Modules to be selected
3. Various syntaxes to be referred for programming in TwinCAT3[5]

The paper"Implementation of Home Automation Safety Control Using Programmable Logic Controller" by S. Sasikala et al deals with the ladder diagram for a system to monitor and control the ON/OFF status of the electrical appliances. Accurate and reliable operation of relay based industrial automation is not practically possible, hence switching to PLC based automation is one of the better solutions which make the process simple and more reliable. In this paper programming is simple when compared to other control systems and trouble shooting is also easy, since we have used PLC. A ladder diagram has been made to control the ON/OFF status of the electrical appliances present in various locations from the control room by the use of PLC and HMI. PLC is much better when compared to relay based automation. PLC uses, simple program. The major advantage is that, it consumes less power, low maintenance cost, can be programmed. Also, its self-diagnostic functions enable easy and fast troubleshooting of the system. The machine cycle time is improved tremendously due to the speed of PLC operation is a matter of milliseconds. Thus, productivity increases. Modification of control sequence or application can easily be done by programming through the console or computer software without changing of I/O wiring, if no additional input or output device are required.[6]

In the paper "Home Automation Using PLC" by S.Sujatha et al, the real time data acquisition monitoring and control system has been developed using Programmable Logic Controller and is highly effective, efficient and robust. A number of input-output modules are attached to a PLC providing its expandability and competence. The new In the paper "Home Automation Using PLC" by S.Sujatha et al, the run time data acquisition monitoring and control system has been developed using Programmable Logic Controller and is maximum effective, efficient and robust. A number of input-output modules are attached to a PLC using its expandability and competence. The new expansion modules can be either digital or analogue. The readability of programming and networking of sensors with PLC demonstrates the high easy user interface of the device. A single PLC can control whole industry as it easily replaces the old, obsolete and cumbersome relay logics. During the operation, all activities that occur can be observed by the computer using Logo PLC. The system needs to debugged along the way and fine-tuned if necessary. The system is test run thoroughly until it to be operated. The prototype was mainly built by combining the mechanical design and the electrical design. The system prerequisites the external power supply of 24 V DC and 220 V AC. The requirement of 24 V DC voltages is satisfied with the help of SMPS. The external power supply of 240 V AC is converted into 24 V DC through SMPS. The theory and core concept of the Home Automation System is based on the control system. In electrical design, the features and functions of the electrical elements are required to determine the system requirement. Furthermore, the theory of the wiring system is required for connecting the inputs and outputs devices to PLC. In programming design, understandings of the required control system and how to use the Ladder Diagram to translate the machine sequence of operation are the most important parts, because it has implicit effect on the system performance. [7]

Home/office automation is the control of any or all Electrical devices in our home or office, whether we are there or away. Home/office automation is one of the most exciting increments in technology for the home that has come along in decades. There are hundreds of products available today that helps us to control over the devices automatically, either by remote control or even by voice command. In this paper, the main part that is discussed is regarding the automatic control of home appliances (On/Off) with the help of computer and micro-controller

(8951).This is a wired system and all appliance must be connected with the help of cables. The other modules which are used in order to accomplish our desired goal are Dallas Timer, Relays, ULN, MAX232, Keil cross compiler, flash magic and power supply circuit. This paper establishes the design and implementation of appliances controlling using pc module. Simply by using this home automation we can save time, money, man power. And also we can have command, security and convenience on controlling appliances.[8]

Home and Building Automation Systems (HBAS) are becoming of widespread adoption. When distinct users interact with such systems, their intentions are likely to be different, often resulting in conflicting occasions, which the systems helps to recognize and resolve automatically. The work done by Paulo Carrera et al aims at investigating conflict in HBAS and creating a solution to detect and evaluate them. In their thesis titled "Towards automatic conflict detection in home and building automation systems" they review the literature concerning conflict detection and resolution, and propose a formal framework based on constraint evaluating that enables detecting and solving conflict situations in automatic mode. Home and building automation systems (HBAS) are systems that control electric equipment and devices in homes or buildings. These systems know an demanding rate of adoption, mostly due to their role in energy management, helped by the dissemination of a wide variety of intelligent consumer electronics equipment .Still, mass use of these systems is hampered by lots of reasons, ranging from the cost of the hardware, which is notably high for the average home user (in the order of the thousands), to difficulties of installation, configuration, and interaction. Nevertheless, it is safe to hope that these systems become ever more popular and gives a larger number of functionalities. This should serve as an incentive to create truly flexible and intelligent systems, that are capable of anticipating users' intentions, and proactive in helping users on their activities. However, this vision of intelligent home and building automation systems has been largely unmet, since many systems hardly go abroad scheduled sequences of actions and a lot simple sensor–actuator rules. Another interesting aspect is that we are witnessing a shift in consumer's mentality with respect to their expectations towards electronic devices, which will eventually grab the HBA market. In consumer electronics, systems must be designed in a user-centric manner, with the needed flexibility for constant adaptation, since consumers search for more usable, easy to learn, customizable and products. If a device does not live up to this standard, the user gradually disposes of it in favour of a higher sophistication or flexible one. However, in home and building automation, this will not be the case. Consumer electronics can be eliminated and replaced easily, but replacing an HBA system is a lot harder in practice. Also, users want to feel in control of their lives. In order to be non-intrusive and non-disruptive, intelligent environments take actively based on the state of devices, objects, places and people. This abstract notion of state is commonly referred to as context. Context detection implies to the collection and analysis of data from sensors placed on the user's environment, and to the system's inference of the live scenario. This inference is based on pattern detection of sensor readings from previous user activities and feedback, and even on mathematical predictions. Upon detecting a change in context, this system gives results based on a set of previously defined policies and rules. The system behaviour inspired from its context-awareness and from how it automatically responds to context changes. In an intelligent environment, however, multiple contexts may coexist, entailing distinct reactions, which can conflict with each other. For example, one context may execute a lamp to be turned on while another may imply that it should be switched off. Ideally, these conflicting situations should be automatically reconcile by the HBAS. With that aim, we will here by motivate and propose a solution consisting of a prototype system that, specified on context information, is able to self acting detect and resolve conflicts on behalf of users. [9]

2.1 Sensors used

2.1.1MQ-2 Semiconductor Sensor for Smoke detection

Sensitive material of MQ-2 gas sensor is SnO2, which with lower conductivity in clean air. When thetarget inflammable gas exist, The sensor's conductivity is more higher parallelly with the gas concentrationrising. Please use simple electrocircuit, Convert change of conductivity to correspond result signal ofgas concentration.

Model name	MQ-2
Sensor Type	Semiconductor
Standard Encapsulation	Bakelite (Black Bakelite)
Detection Gas	Combustible gas,smoke
Concentration	300-10000ppm

Table-1: MQ-2 Specification

ISSN: 2321-8169
1269 – 1275

2.1.2MQ-6 Semiconductor Sensor for Butane gas

Sensitive material of MQ-6 gas sensor is SnO2, which with lower conductivity in clean air. When thetarget inflammable gas exist, The sensor's conductivity is more higher along with the gas concentrationrising. Please use simple electrocircuit, Convert change of conductivity to correspond output signal ofgas concentration.

Model name	MQ-6
Sensor Type	Semiconductor
Standard Encapsulation	Bakelite (Black Bakelite)
Detection Gas	Isobutane, Butane, LPG
Concentration	300-10000ppm

Table-2:MQ-6 Specification

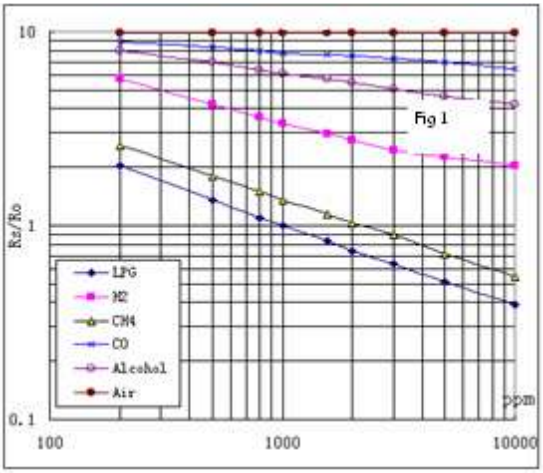

Fig.1:Graph of Rs/Ro Vs ppm

2.1.3 PIR sensor

PIR sensors allow you to sense motion, approximately always used to detect whether a human has moved in or out of the sensors range. They are inexpensive, low-power, easy to use and don't wear out. For that reason they are frequently found in appliances and gadgets used in residentially or businesses. They are often referred to as PIR, "Passive Infrared", "Pyroelectric", or "IR motion" sensors.

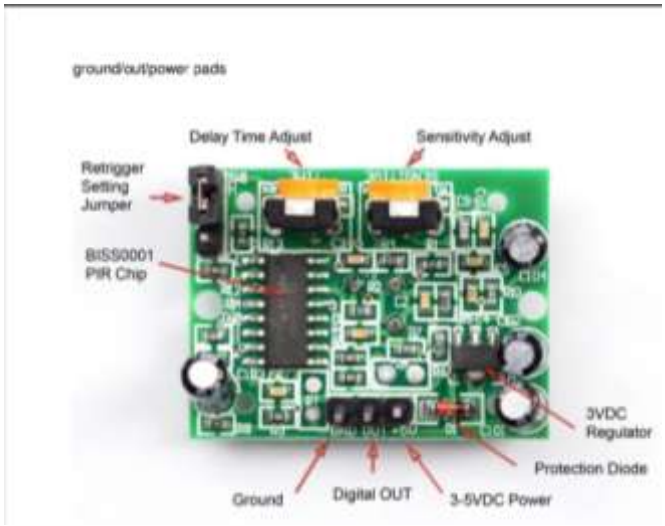

Fig-2: PIR sensor

2.1.4 Level Switch

The Series LC40 level switch for liquids uses a float to actuate a micro-switch. The magnetic coupling drives the switch so there is no direct link, requiring a seal,between the process and the instrumentation. This provides a robust measurement that is exactly suited tosevere or corrosive processes.The installation in the tank can be vertical or horizontaldepending on the variety of float system used.

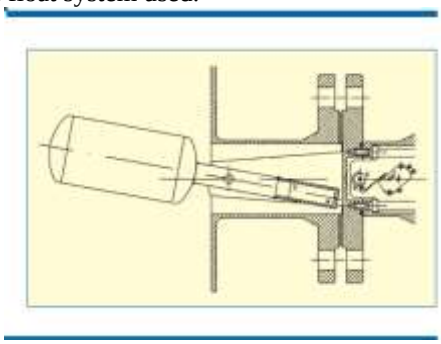

Fig-3:Level Switch

2.1.5 LDR

An LDR is a component that has a (variable) resistance that varies with the light intensity that falls upon it. This allows them to be executed in light sensing circuits. A classical LDR. LDR Circuit Symbol.

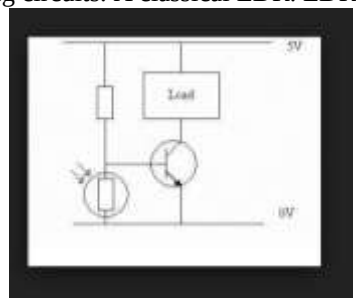

Fig-4:LDR

3. CONCLUSION

In our thesis we achieved automated system for home automation usingPIR sensors, gas leakage sensors, smoke detection sensors, light dependant resistor. It includes alerting systems for fire, gas leakage and suspicious movements, also occupancy based lighting control, Outdoor lighting control based on amount of ambient lighting and Tank water level control. These systems use Beckhoff PLC with control logic written using TwinCAT3 software. The design process includes selection of sensors, PLC I/O terminals, location for sensor mounting and design of control logic. Finally the system will be controlled via any device connected to the Home Wi-Fi network.

4.ACKNOWLEDGEMENT

It is a genuine pleasure to express my deep sense of thanks and gratitude to my mentor and guide Prof.G. B. Firame. His dedication and keen interest, above all, his overwhelming attitude to help students has been mainly responsible for completion of our work. His timely advice, meticulous scrutiny, scholarly advice and approach have helped us to a great extent to accomplish this task.

I thank profusely to all the staff of Mechanical Engineering Department, Smt. KashibaiNavale College of Engineeringfor their kind help and cooperation throughout my study period.

This acknowledgement would be incomplete without expressing my special thanks to Prof.Dr. A. P. Pandhare, Head of the Department (Mechanical Engineering) for their support during the work. I would also like to extend my heartfelt gratitude to the Principal, Dr. A.V. Deshpande who provided a lot of valuable support, mostly being behind the veils of college bureaucracy

Finally it is our privilege to thank our mentors at “BeckhoffGmbh.” and “Educate to Automate”for their assistance and training in PLC programming. It surely has increased our knowledge about the automation industry.

REFERENCES

[1] J. Bhatt, "Design and Development of Wired Building Automation Systems", Energy and Buildings (2015), (Accepted Manuscript).

[2] Pedro Domingues, Paulo Carreira, Renato Vieira, Wolfgang Kastner; "Building automation systems: Concepts and technology review", Computer Standards & Interfaces.

[3] International Standard IEC-61131-3, Programmable controllers; part-3; Programming Languages, Second Edition 2003-01, By the International Electrotechnical Commission.

[4] "IEC 61131-3 Programming Industrial Automation Systems", By Karl-Heinz John & Michael Tiegelkamp, Springer.

[5] Beckhoff Information System (infosys.beckhoff.com)

[6] S. Sasikala, Olivia Ramya Chitranjan, K. Muthulakshmi, "Implementation of Home Automation Safety Control Using Programmable Logic Controller", Middle-East Journal of Scientific Research, 2014.

[7] S.Sujatha, K.M.Om Prakash, M.Rajesh Kumar, "Home Automation Using PLC", International Journal of Advanced Research in Electrical, Electronics and Instrumentation Engineering, Volume-5, Special Issue-1, March 2016.

[8] Hari Charan Tadimeti, Manas Pulipati, "Overview of Automation Systems and Home Appliances Control using PC and Microcontroller", International Journal of Science and Research.

[9] Paulo Carreira, Sílvia Resendes, André C. Santos, "Towards automatic conflict detection in home and buildingautomation systems", Pervasive and Mobile Computing, Volume 12, June 2014.