Design and Analysis of Mechanical System for Fast Loading and Unloading of Work Piece on CNC Lathe

Shreyas Ghiware[1], Pranav Thorat[2], Ajinkya Barge[3], Swapnil More[4], A. D. Bugade[5]

[1]*Student, Department of Mechanical Engineering, Smt. Kashibai Navale College of Engineering,*
shreyas.ghiware@gmail.com
[2] *Student, Department of Mechanical Engineering, Smt. Kashibai Navale College of Engineering,*
pranavthorat57@gmail.com
[3] *Student, Department of Mechanical Engineering, Smt. Kashibai Navale College of Engineering,*
ajinkyabarge24@gmail.com
[4] *Student, Department of Mechanical Engineering, Smt. Kashibai Navale College of Engineering,*
moreswapnil787@gmail.com
[5] *Professor, Department of Mechanical Engineering, Smt. Kashibai Navale College of Engineering,*
adbugade@sinhgad.edu

ABSTRACT

The objective of automation includes cycle time improvement, cost reduction, productivity improvement, material handling and efficiency improvement. Material handling and related mechanism to pick and place are widely found in automation sectors and industrial manufacturing. During lathe machine operation loading and unloading of work piece is done manually. In this process sequence of performing the operation was not proper. Cycle time is higher because of manual loading and unloading. Target is to automate the lathe machine. Automatic loading and unloading of component on CNC lathe improves productivity also it includes analysis and detail study of manufacturing process of components on machine. This Paper involves the pneumatic automation to increase cycle time and efficiency. There are different grippers which are based on different grasping technologies. The mechanical gripper used in project is a three jaw which is different from other which controls movement of the jaws which is done with the help of pneumatic cylinders using air pressure and movement of gripper is done with the help of slider mechanism. AC motor is used along with spur gears and a threaded shaft arrangement for proper motion of a system. By adequate selection of working parameter values the optimum variant of the system for automation of CNC lathe is obtained.

Keywords*: Automation, CNC lathe, Gripper, Jaws etc.*

---

1. INTRODUTION

Nowadays there is change in technology used in manufacturing companies. Especially in industries the competition is increased very much. Automation deals with the improvement, development, implementation and evaluation of systems of people, knowledge, energy, equipment, material and process. Automated manufacturing mainly includes the use of automation to reproduce things usually obtained in a industries. The automation technology has many advantages and thus it influences in the manufacturing and production processes. Automation techniques play very important role in increasing the productivity.

Robotics is a branch in science and Engineering of robot making which deals with design, development, manufacturing, application and real time use in day today‘s world. It includes three branches mainly mechanics, electronics and software development. To be effective, it requires mechanical hands, which are generally referred as grippers. The role is to replace human hands with mechanical one. Studies have proved that if the gripping capacity

of a 5-finger mechanical hand is considered 100%, then the gripping capacity of a 4-finger mechanical hand is of 99%, that of a 3-finger hand of 90% and that of a 2-finger hand, namely of a 2-jaw gripper is only of 40%. The maximum number of motions to be conducted by a gripping system is six, namely three translations and three rotations (pitch, twist yaw). The manipulators work as the working arm of the robot whereas the End effectors work as the hands o f the robot. The end effectors are actuated by various mechanisms which are mechanical drives, electrical drives, hydraulic drives and Pneumatic drives.

2. PROBLEM STATEMENT

Exoskeleton Robotics Technology, Pune has been serving a wide spectrum for the past few years. Exoskeleton Robotics has developed wide range of CNC and Special purpose machines for different applications with a strong presence in the domestic market. Exoskeleton Robotics has now moved on to compete in the market in line with its vision to move ahead with continual improvement in its product quality maintaining its highly competitive price. A recent survey could reveal that there is a scope for productivity improvement by using these machines by using some automation techniques at much lower rates. The various operations, loading, and unloading methods were studied. During lathe machine operation, loading and unloading of work piece is done manually. During this process, sequence of performing the operations was not proper. Labour fatigue was more. Cycle time was higher because of manual loading and unloading of the components.

2.1 Existing Scenario

As we know that time required for loading of work piece manually on CNC lathe is approximately 20 seconds with proper loading and eccentricity of work piece on CNC lathe. That's why the total time required for loading and unloading of work piece manually is 40 seconds. Considering 1000 work pieces the time required is 40000 seconds i.e. 11 hours which is too much. That's why automation is required for loading and unloading of work piece during the mass production.

3. METHODOLOGY

The current problem faced is the large cycle time for the process. This can be eliminated by using a pneumatic actuated two jaw gripper which will move with the help of rack and pinion arrangement in the vertical direction a nd the horizontal movement will be controlled by slider which will move with the help of the belt and motor on the bed. The gripper has two jaws aligned at 180 degrees from each other. One of the jaws removes the machined part from the chuck and then the gripper rotates in 180 degrees with the help of the stepper motor. The other jaw, then loads the job for machining into the chuck. Then the ready job is stored on the pallet.

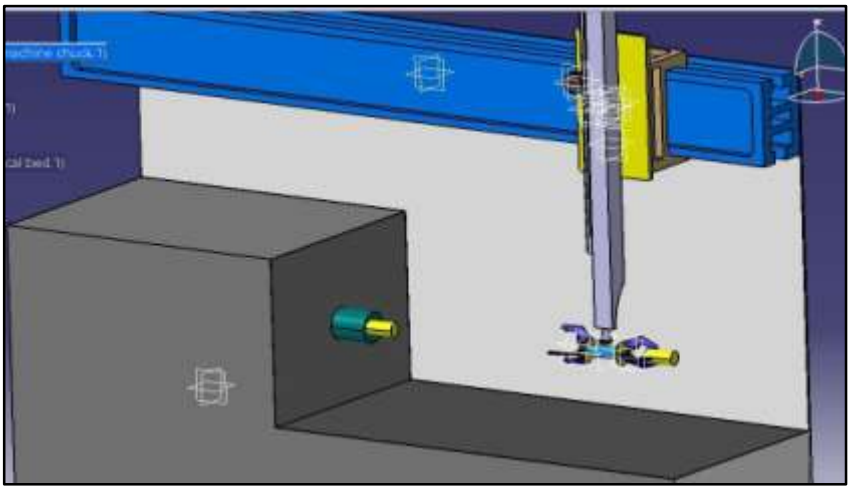

Fig-1: Methodology for Automatic Loading and Unloading of Work piece

4. MECHANICAL GRIPPER

Robotic Gripper: - These are the type of robots which have ability to grasp definite objects and then positioning it according to requirement. There are two basic parts of robotic grippers. They are the manipulators and end effectors.

A gripper is a device which enables the holding of an object to be manipulated. The simplest way to describe gripper is to consideration of the human hand, just like a hand gripper enables holding, handling, tightening and releasing of an object. A gripper is just one component of an automated system. A gripper is attached to a robot or it is part of a fixed automation system. As we know that to hold the job we want gripping action like our fingers for that purpose we design a gripper with three jaws which has optimum gripping action with optimum cost. By using three fingers gripping efficiency will be 90% as discussed above.

4.1 Types of Gripper according to the gripping action

1) Mechanical Gripper

2) Vacuum gripper

3) Magnetic Gripper

4) Clamping gripper

4.2 Why Mechanical gripper?

1) Easy to operate

2) Low cost

3) For our purpose diameter of job is constant if we want to change the diameter, whole gripper system is going to rebuilt which is very costly and hectic for other mechanism

4) Vacuum gripper used only for pick and put purpose not for holding purpose

5) Magnetic Gripper is restricted only for the magnetic material

Types of mechanical Gripper according to its link mechanism

Class 1 Class 2 Class 3

Fig-2: Types of Gripper According to its Link Mechanism

From above discussion we have used “Three Jaw Pneumatically Operated Class 3 Mechanical Gripper”.

ISSN: 2321-8169
926 – 933

4.3 Design of Gripper

The design of the end-of-arm tooling for a pneumatic assembly system is very important for reducing errors and decreasing cycle times. This is the piece of the gripper parts handler or assembler that physically interacts with the environment. Many factors are responsible for the common failures of workcells, well designed grippers can increase through put, improve reliability of system, compensation of robot inaccuracy and perform additional functions for the assembly. The design of the gripper systems is not a important task. Often a small feature that can be added to a part can greatly increase the reliability of the gripper. A proper gripper design can increase in system reliability, as well as decrease in implementing cost of the system.

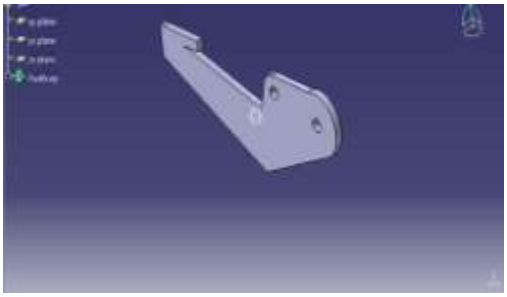

Fig-3: CATIA model of Gripper Jaw

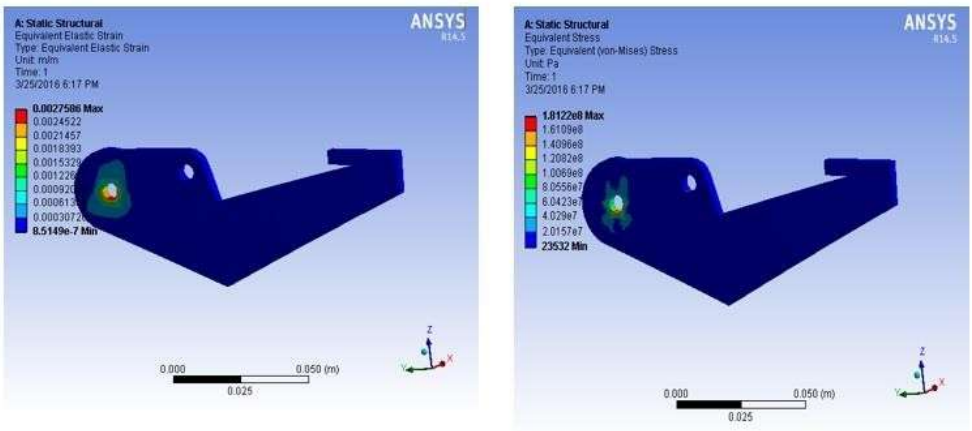

Fig-4: Strain and Stress Analysis of Jaw

In strain analysis, maximum strain occurs at same point where the stress is occurring which is represented by the red colour. The maximum strain which is occurred is negligible which is in the permissible range. In stress analysis, maximum amount of stress which is represented by the red colour is produced at the joint where the gripper jaw is connected with the piston rod through pin which in the permissible range that of the force applied by the gripper. Hence the design of gripper jaw is safe.

ISSN: 2321-8169
926 – 933

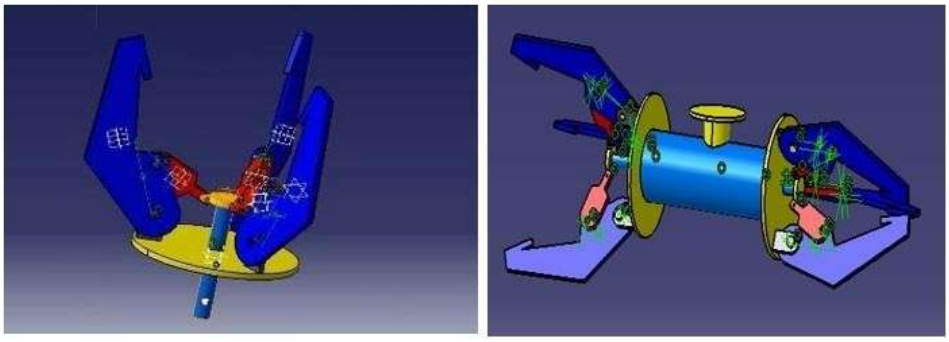

Fig-5: Gripper Jaw and Gripper Assembly

5. SPUR GEAR

Parallel and co-planer shaft connected by gears are known as spur gear. Spur gear has straight tooth and are parallel to the axis of the wheel. During working of spur gear tooth, it is subjected to cyclic stress. Both stress may not attain their peak values at the same point. These failures can be reduced by analysis and by producing proper tooth surface profile with desired manufacturing methods. The power between aligned shafts can be transmitted by using spur gears. Spur gear give 98-99% operating efficiency.

5.1 Design consideration for Spur Gear

Lewis considered a gear tooth to be a loaded as a cantilever beam with a force applied to the tip of the gear. He made the following assumptions;

1) The load is applied to the tip of a gear tooth;
2) Only the tangential component of the force will be a factor (the radial component is neglected);
3) The load is distributed uniformly across the entire face width of the gear;
4) Sliding friction forces are negligible;
5) No stress concentration is present in the tooth fillet.

5.2 Specification of Spur Gear

1. Module (m) = 3 mm
2. Pressure Angle α = 20
3. Number of teeth z = 20

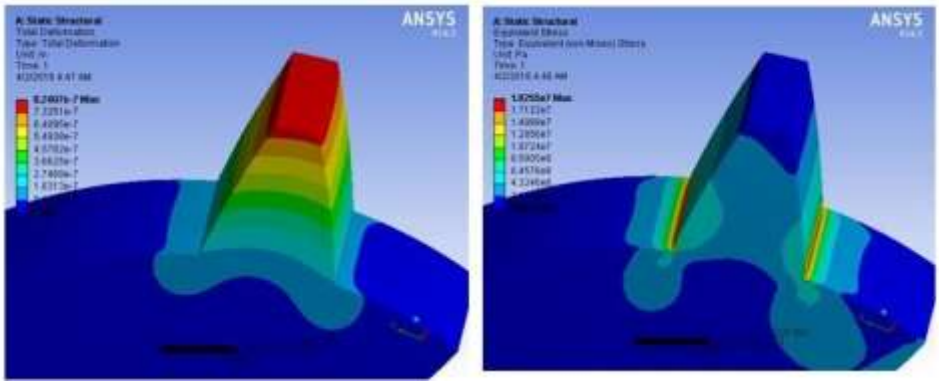

Fig-6: Strain and Stress Analysis of Spur Gear Tooth

ISSN: 2321-8169
926 – 933

From strain analysis, maximum deformation occurs at the face of the gear tooth which represented by the red colour. We select 17Mn1Cr95 which prevent deformation of material. Also, it is found that the maximum deformation of the material is negligible. It doesn't effect on gear performance. In stress analysis, maximum stress occurs between the flank and tooth space which is represented by the red colour. The value of the stress which is produced is very small as compared to the analytical one and it is in permissible range. Hence the design of gear tooth is safe.

6. CNC LATHE MACHINE BED

Lathe machine bed is considered as one of the tools and widely used in industries. Casting is only the Manufacturing process used to produce the beds. For the design of a lathe machine bed in CATIA we select grey cast iron as a material. It is required to use CNC lathe machine to get more precise dimensions and intricate shape.

6.1 Guidelines for the Design of CNC Lathe Bed

1) High weight
2) Less vibration
3) Damping efficiency
4) Sudden loss
5) Free from casting defect

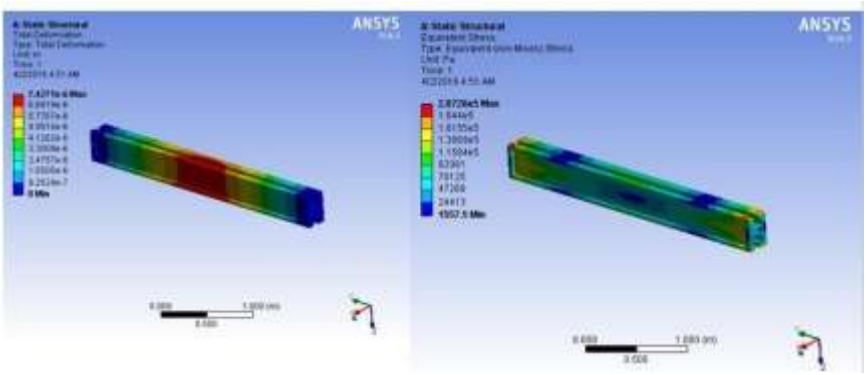

Fig-7: Strain and Stress Analysis of LM Bed

In strain analysis, maximum amount of deformation is occurred at the middle of the lathe bed which is shown by red colour. The grey cast iron is the material we select for the design of LM bed which produce high strength to the bed only when the bed is manufactured with high weight. As the value of the deformation is very less. In stress analysis, maximum amount of stress is produced at the end of the CNC lathe bed which is shown by the red colour. The value of the stress which is obtained during the analysis is within the permissible limit. It gives high rigidity and high stability against the vibration. Hence the design is safe.

ISSN: 2321-8169
926 – 933

7. SLIDER

Slider is the most important part in our project. Our whole automation work is based on the slider. Because slider consist of gripper assembly along with two jobs, rack and pinion drive. When slider is slid over the guide ways, it moves all these components in horizontal direction. During this process it should have to resist high amount of thrust. For the manufacturing of slider we have to use grey cast iron as a material which provides good working condition.

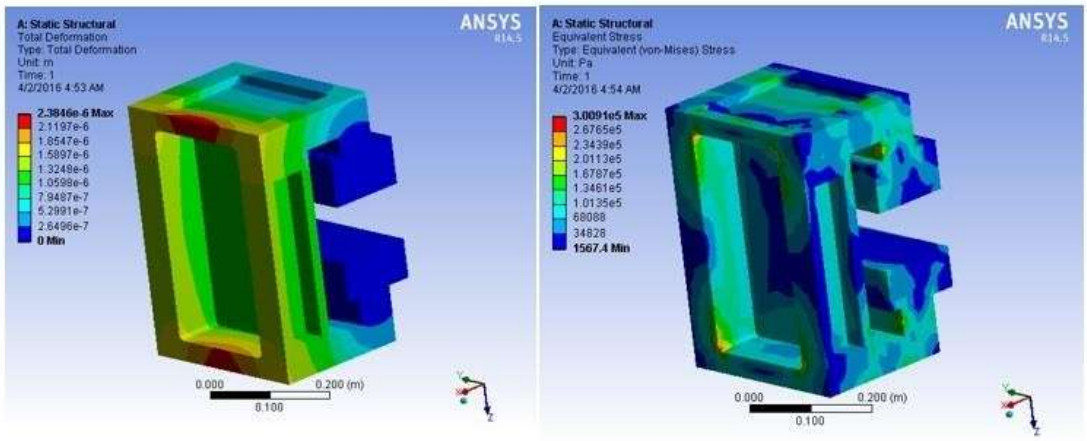

Fig-8: Strain and Stress Analysis of Slider

In strain analysis, maximum amount of deformation is produced at the uppermost edges of the slider which is shown by the red colour. Whatever the stress is produced is very negligible. It does not affect the slider design as the material selected for the slider provides good thermal property. In stress analysis, maximum amount of stress is produced at the uppermost joints of the block which is shown by the red colour. But the maximum stress, which is produced is within the permissible range. Hence the design of slider for LM bed is safe.

8. STEPPER MOTOR

Stepper motors are used to convert electrical pulses into discrete mechanical movements. Originally a stepper motor was designed to provide accurate position control within number of steps without using a sensor and they are open loop stable in any step position accordingly. No feedback is needed to control the stepper motor. Stepper motors have low speed and holding torque.

In this system, Stepper Motor used

1) For the transverse motion of sliding along x-axis direction.
2) To drive the pinion gear for lifting mechanism.
3) For gripping action.

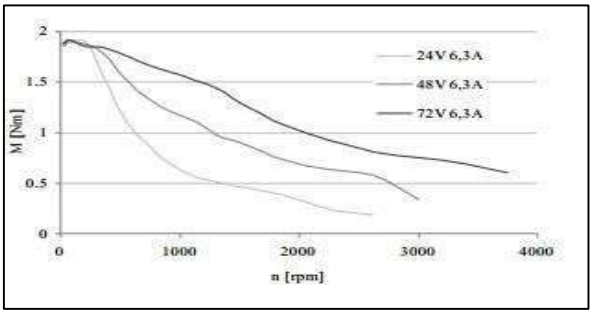

Fig-9: Mechanical characteristics for stepper motor

9. CONCLUSION

1) After design and analysis of system, the designed system is safe to be manufactured.
2) After the installation of three jaw gripper the cycle time of the operation will be reduced.
3) Due to reduced cycle time, the productivity will be increased.
4) Pneumatic actuated gripper is more convenient than Hydraulic actuated gripper.
5) Finite element analysis is the best method for intricate geometries to calculate results.
6) The stepper motor gives more accurate angular displacement.

10. REFERENCES

[1] Shivbhadrasinh Jhala, Apurva Indrodia and R.L. Jhala, Design and Development of Automation of Loading and Unloading to DX-100 CNC Turning Centre, International Journal of Science, Technology & Engineering, Volume 1, Issue 11, May 2015.
[2] Bhavin C. Shah, Prof. Devendra Nagal and Dr. Swati Sharma, Air Compressed Gripper Technology for Industrial Automation Robots, International Journal for Technological Research in Engineering, 2016, pp. 16-18.
[3] Gujjalapudi Krishnavamsi and G. Adi Narayana, Design and Analysis of Pneumatic Gripper with Two Jaw Actuation, International Journal of Scientific Research and Technology Research, Vol.04, Isssue.01,January-2015,pp. 20-23.
[4] Vaibhav Raghav, Jitender Kumar and Shailesh S.Senger, Design And Optimisation Of Robotic Gripper, Proceedings of the National Conference on Trends and Advances in Mechanical Engineering, YMCA University of Science & Technology, Faridabad, Haryana, Oct 19-20, 2012,pp. 397-400.
[5] Pradeep Kumar Singh, Manwendra Gautam, Gangasagar1 and Shyam Bihari Lal, Stress Analysis Spur Gear Design By Using Ansys Workbench, International Journal of Mechanical Engineering and Robotic Research, Vol.3, No. 3, July 2014,pp. 64-68.
[6] Rohan Kulkarni, S. Shivkumar and Roopa K. Rao, Productivity Improvement on a CNC Lathe by Automatic Loading and Unloading of Throttle Valve Component, International Journal of Scientific & Engineering Research, Volume 2, Issue 12, December-2011.